YGT19-0055

Handling Manual
for
HV 4.8 CONNECTOR 2P FEMALE
(SHORT TERMINAL VERSION)

<NOTE>

Please be informed that the contents in this handling manual

may be revised without notice.

YAZAKI (CHINA) INVESTMENT CO.,LTD

SEPT. 16. 2019

This handling manual mentions the minimum items necessary on using this product.
Please observe these written contents when handling.
YAZAKI shall not be liable for any damages resulting from misuse or failure to follow this manual.

Table of Contents

1. Components part list ..... P.3 ~ P.4

2. Manufacturing process and inspection precautions

No. 1 Rear Holder and Rubber to Wire Installation P.5

No. 2 Wire Insulation Stripping P.6

No. 3 Wire Sheath and Braided Shield Stripping P.7

No. 4 Shield Terminal and Shield Pipe Installation P.8

No. 5 Shield Terminal and Shield Pipe Crimping P.9

No. 6 Power Terminal Crimping P.10

No. 7 Power Terminal Installation and Front Holder Setting P.11

No. 8 Rubber and Rear Holder Installation P.12

3. The size of Insertion Tool P.13

4. Power Terminal Removal and Precautions .....

No. 1 Front Holder Full-lock Removal P.14

No. 2 Terminal Removal P.15

1. Components Part List

No.	Part Name	Part No	Image Form	Function
1	HV 4.8 CONNECTOR 2P HOUSING FEMALE SUB ASSEMBLY	7285-1207-51 7285-1208-51 7285-1209-51	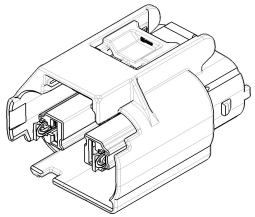	TERMINAL RETENTION SHIELD GROUND
2	HV 4.8 CONNECTOR 2P TERMINAL FEMALE	7185-0906-02	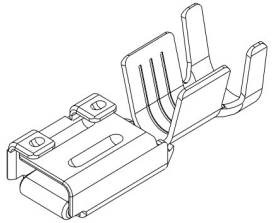	CONNECTION OF ELECTRIC CIRCUIT
3	HV 4.8 CONNECTOR 2P SHIELD TERMINAL	7185-0903-03 7185-0805-03	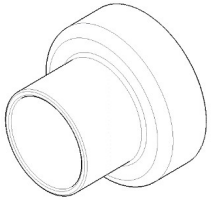	CONNECTION BETWEEN SHIELD SHELL AND BRAIDED WIRE
4	HV 4.8 CONNECTOR 2P SHIELD PIPE	7185-0807 7185-0806		CONNECTION BETWEEN SHIELD TERMINAL AND BRAIDED WIRE
5	HV 4.8 CONNECTOR 2P RUBBER	7172-5730-80 7172-5731-30	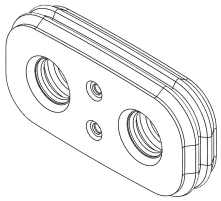	SEALING FOR TERMINALS

1. Components Part List

No.	Part Name	Part No	Image Form	Function
6	HV 4.8 CONNECTOR 2P REAR HOLDER	7185-0799 7185-0801-51	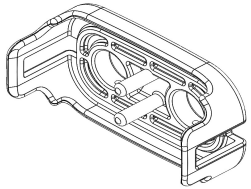	PREVENTS RUBBER FROM DETACHING

2. Manufacturing process and inspection precautions

No.	1	REAR HOLDER and RUBBER to wire Installation
Production Method	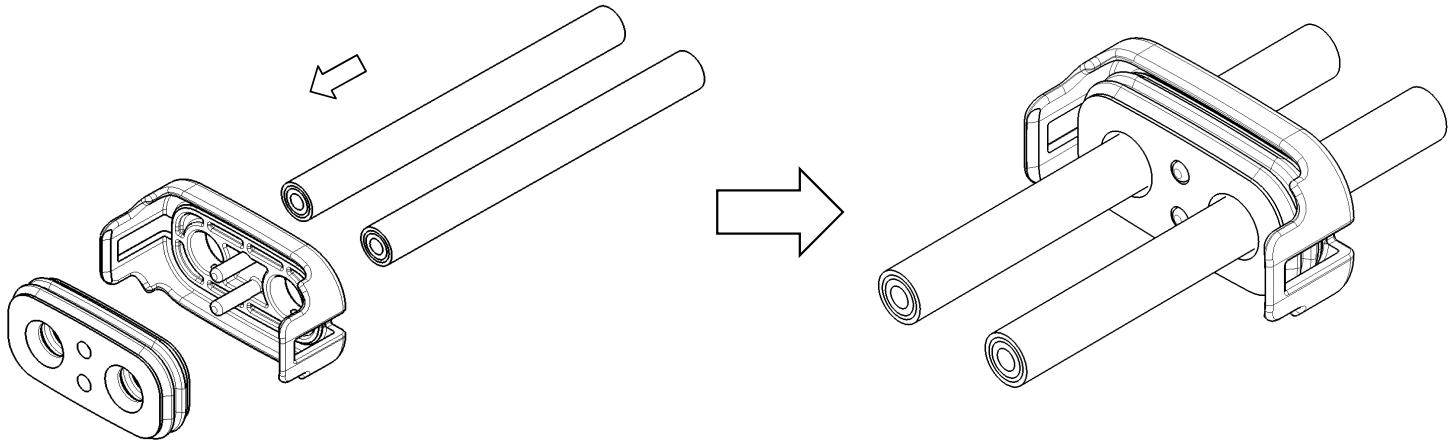	
Part Name	REAR HOLDER, RUBBER, Power Wire	
Equipment	-	
Standard	-	
Inspection Matter	・There shall be no dust and other foreign object on the rubber. ・There shall be no damage or scratch on the sealing surface of rubber.	
Precautions	・Care must be taken not to damage the seal surface during wire insertion, Damage on the sealing surface can lead to product malfunction.	

2. Manufacturing process and inspection precautions

No.	2	WIRE Insulation Stripping
Production Method	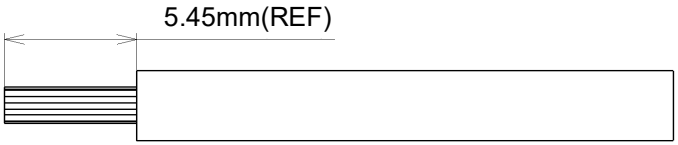 Power Wire Figure 1 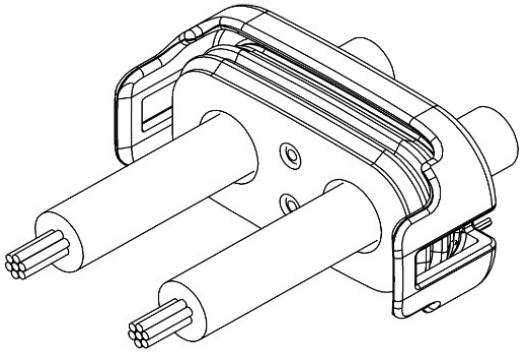	
Part Name	Power Wire	
Equipment	Stripping tools	
Standard	Insulation Strip dimension: ・Power : 5.45mm (Refer to figure 1)	
Inspection Matter	・Insulation strip must be free from any damage.	
Precautions	・Damage in wire strip can cause increase in crimp resistance which may lead to product malfunction.	

2. Manufacturing process and inspection precautions

No.	3	WIRE Sheath and Braided Stripping
Production Method	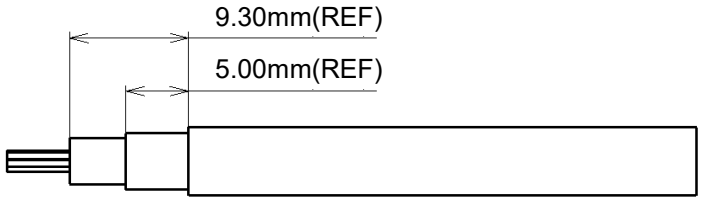 Figure 2 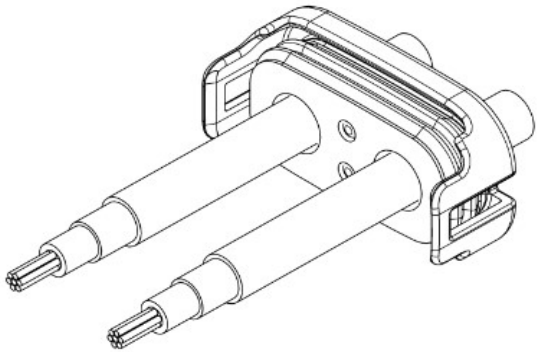	
Part Name	Power Wire	
Equipment	Stripping tools	
Standard	・Insulation Strip dimension: 9.30mm (Refer to figure 2) ・Braided shield length: 5.00mm (Refer to figure 2)	
Inspection Matter	・Insulation and braided shield strip must be free from any damage.	
Precautions	・Damage in wire strip can cause increase in crimp resistance which may lead to product malfunction.	

2. Manufacturing process and inspection precautions

No.	4	SHIELD TERMINAL and SHIELD PIPE Installation
Production Method	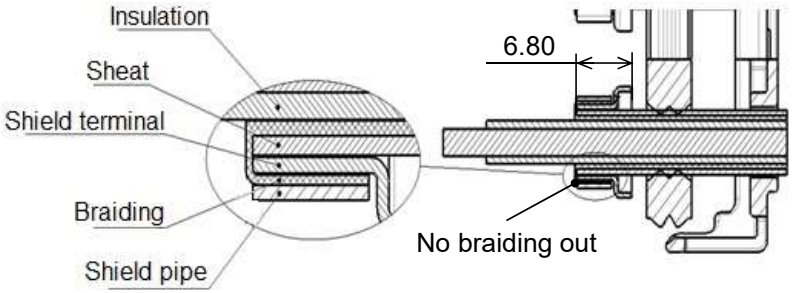 Figure 3 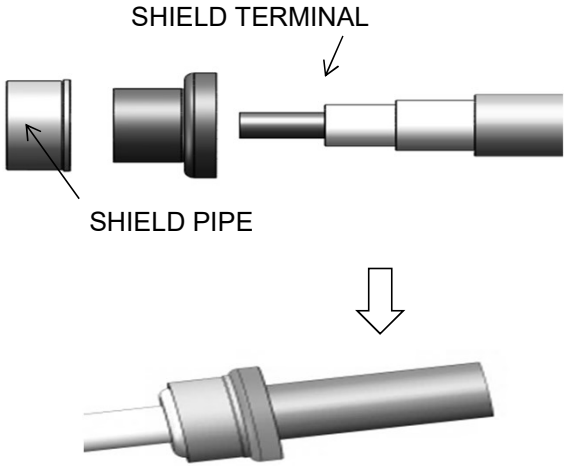	
Part Name	SHIELD TERMINAL, SHIELD PIPE	
Equipment	Crimping Machine	
Standard	Shield Crimping Stantard (Refer to YGT19-0054)	
Inspection Matter	・Braided shield must be properly bended between shield terminal and shield pipe. (Refer to figure 3)	
Precautions	・Care must be taken not to damage the braided shield, damage may cause product malfunction.	

2. Manufacturing process and inspection precautions

No.	5	SHIELD TERMINAL and SHIELD PIPE Crimping
Production Method	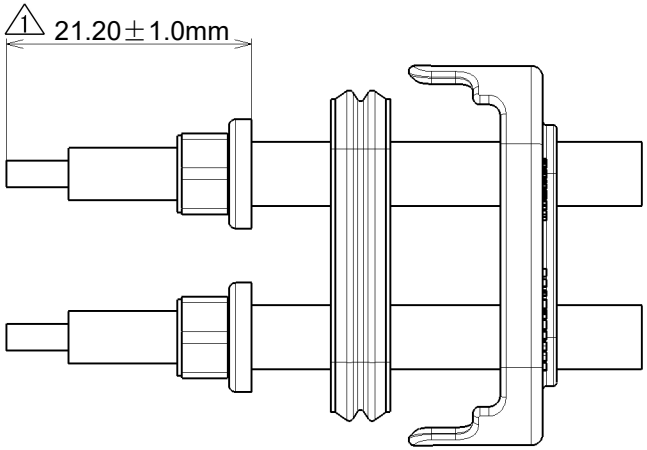 Figure 4	
Part Name	SHIELD TERMINAL, SHIELD PIPE	
Equipment	Crimping Machine	
Standard	・Dimension from the tip of the shield terminal to the tip of conductor: 21.20mm (Refer to figure 4)	
Inspection Matter	・There shall be no protruded braided wire. ・There shall be no burr on shield pipe crimped.	
Precautions	・Care must be taken not to damage the rubber and rear holder during crimping process.	

2. Manufacturing process and inspection precautions

No.	6	POWER TERMINAL Crimping
Production Method	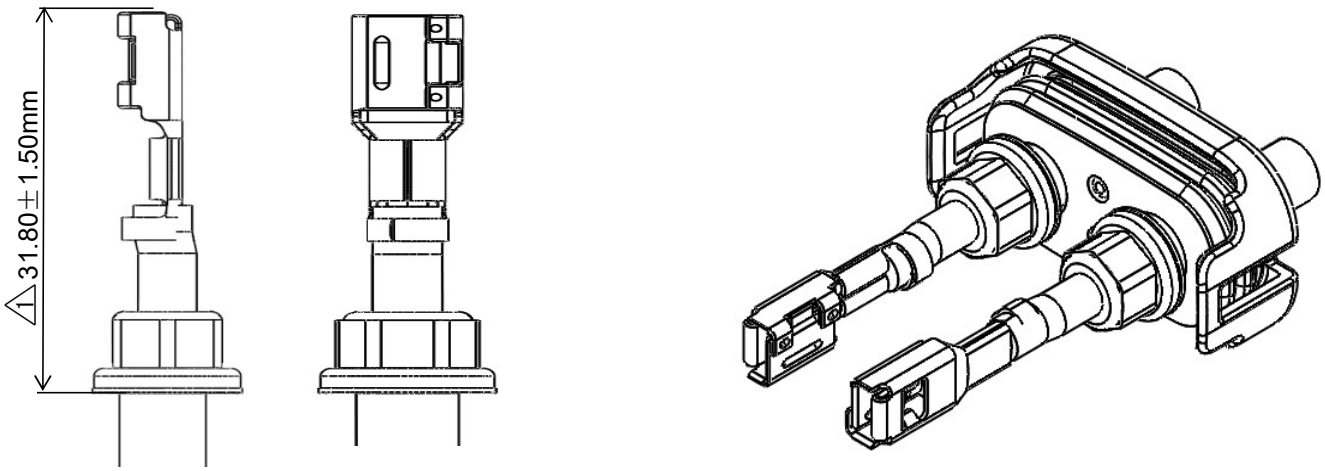	
Part Name	TERMINAL FEMALE	
Equipment	Crimping Machine	
Standard	Crimping Standard (Refer to YGT19-0054)	
Inspection Matter	・After crimping there should be no damage on the terminal female. ・No burr after crimping. ・No deformation after crimping.	
Precautions	・Care must be taken not to damage the rubber and rear holder during crimping process. ・Damage on crimp may affect the crimp resistance and retention force which may lead to product malfunction.	

2. Manufacturing process and inspection precautions

No.	7	POWER TERMINAL Installation and FRONT HOLDER Setting
Production Method	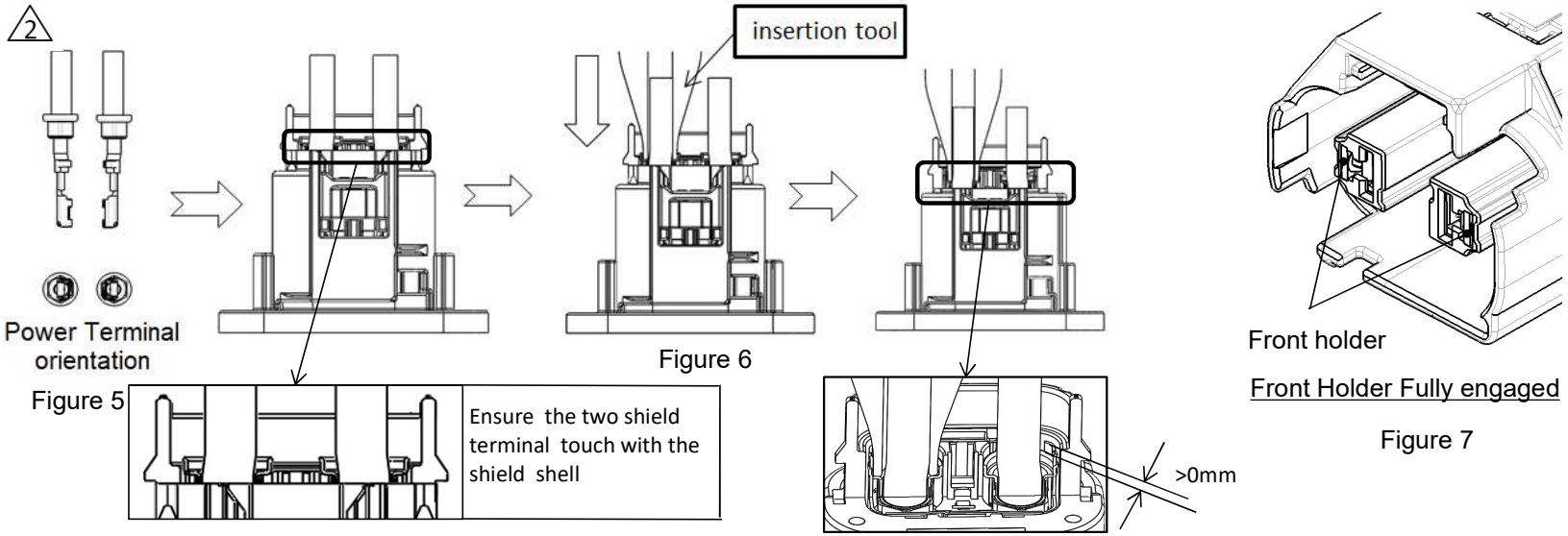	
Part Name	TERMINAL FEMALE	
Equipment	Insertion Tool (Refer to figure 9)	
Standard	-	
Inspection Matter	・The power front holder must be in the pre-set position prior to the installation of terminals. ・Ensure that terminal female was locked to the housing lance. ・There shall be no defects or deformation on power front holder before assembly. ・After installation of all applicable terminals, the power front holder must be moved to the full-lock position. (Refer to figure 7)	
Precautions	・Observe the proper orientation of terminal female before assembly. (Refer to figure 5) ・Insert the terminal female with insertion tool (75N MAX.) until CLICK sound was heared.(Refer to figure 6) ・After inserting the terminal, pull the wire lightly to verify the terminal is locked. ・Do not bend the power front holder lock before assembly. ・If the power front holder is not pushed into the full-lock position smoothly, the terminal may not have been inserted correctly.	

2. Manufacturing process and inspection precautions

No.	8	RUBBER and REAR HOLDER Installation
Production Method	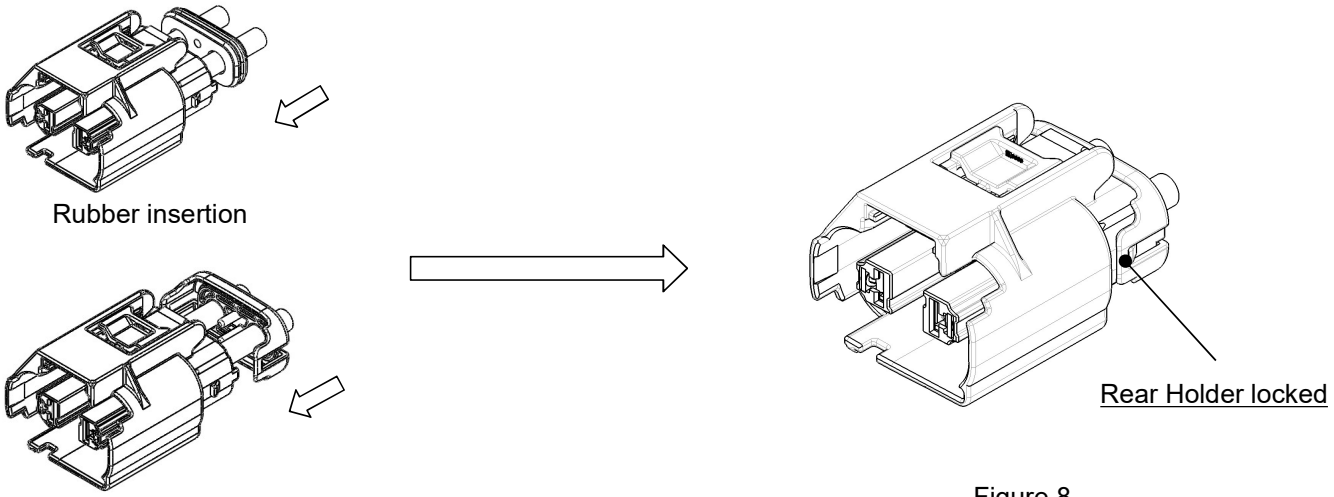 Figure 8	
Part Name	RUBBER, REAR HOLDER	
Equipment	-	
Standard	-	
Inspection Matter	・There shall be no dust and other foreign object on the rubber before installation. ・There shall be no damage on the sealing surface of housing before installation. ・Ensure the locking of rear holder type A/C lock (2 Places) into housing. (Refer to figure 8)	
Precautions	・Care must be taken not to damage the rubber during installation, Damage on the rubber can lead to product malfunction.	

3. The size of Insertion Tool

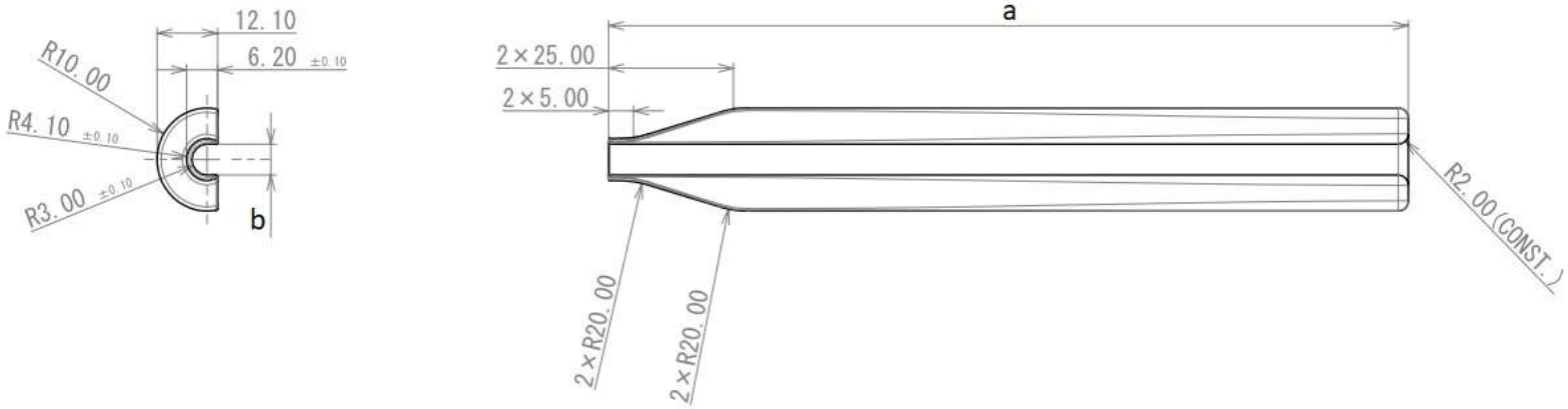

Figure 9

(the dimensions a,b refer to the size of wire)

4. Power Terminal Removal and Precautions

No.	1	Front Holder Full-lock Removal
Production Method	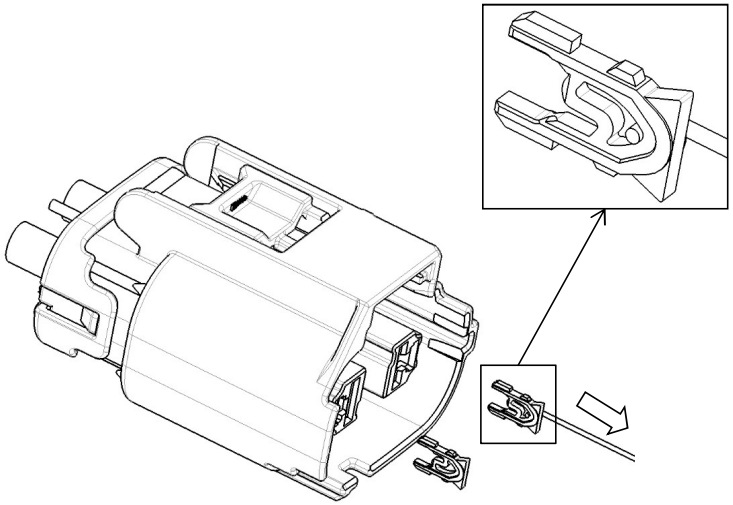 Figure 10 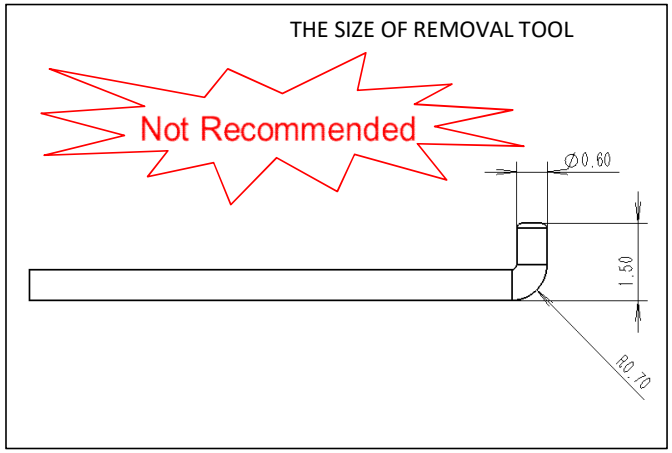 Figure 11	
Part Name	POWER FRONT HOLDER	
Equipment	-	
Standard	-	
Inspection Matter	-	
Precautions	・Disassembly is not recommended.Dedicated tools are required to install Power Front Holder . ・After disassembly and installation again, the retention force of Power Front Holder will decrease.	

4. Power Terminal Removal and Precautions

No.	2	Terminal Removal
Production Method	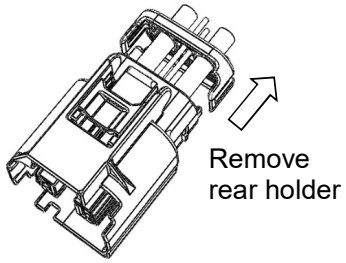 Figure 12 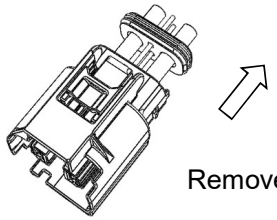 Figure 13	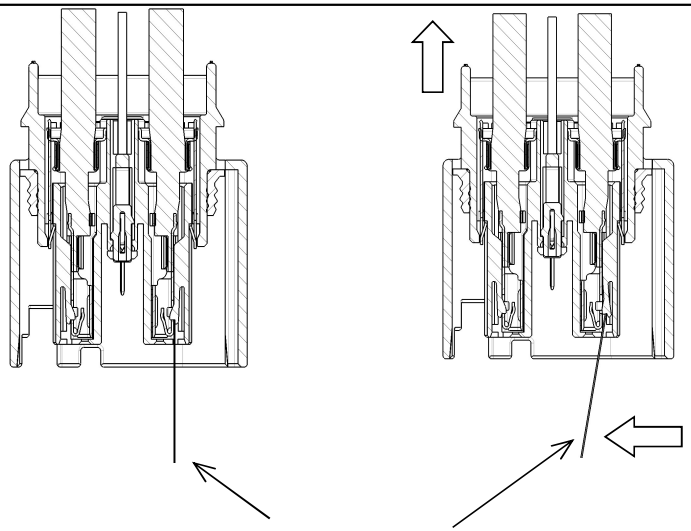 Figure 14
Part Name	POWER TERMINAL	
Equipment	-	
Standard	-	
Inspection Matter	・The terminal removal operation should be performed by trained personnel only ・Remove the rear holder and mat seal before terminal removal operation. ・Insert the removal tool parallel to the cavity of the housing. The tip of tool must be positioned between the servicing tab of the flexible arm and the terminal.	
Precautions	・Please be careful when disassembling.The Power lance will break during the disassembly process. ・If the terminal does not disengage easily from the housing, repeat the steps previously outlined. ・If any damage is visible on the terminal and/or housing, the affected component should be replaced, repairs should not be attempted.	

YGT19-0055	Handling manual for HV 4.8 CONNECTOR 2P ASSEMBLY FEMALE (SHORT TERMINAL VERSION)				
HISTORY					
DATE	CONTENTS	App'd.	Chk'd.	Chk'd.	Prep.
2019.8.14	PRELIMINARY	Haijun.Chen	-	Lijuan.Fan	Lindi.Yang
2020.3.20	Add Tolerance	Haijun.Chen		Lijuan.Fan	Haitong.Shen
2020.5.25	Power Terminal Installation manufacturing process changed	Haijun.Chen		Lijuan.Fan	Haitong.Shen
2021.4.25	Power Terminal Removal and Signal Terminal Removal	Haijun.Chen	-	Lijuan.Fan	Zhibin.Ren