YGT19-0057

Non-related personnel Secrets
関係者外密

Handling Manual for HV 4.8 CONNECTOR 2P HEADER MALE

<NOTE>

Please be informed that the contents in this handling manual

may be revised without notice.

YAZAKI (CHINA) INVESTMENT CO.,LTD

OCT. 10. 2020

This handling manual mentions the minimum items necessary on using this product.
Please observe these written contents when handling.
YAZAKI shall not be liable for any damages resulting from misuse or failure to follow this manual.

Table of Contents

1. Components part list P.3

2. Manufacturing process and inspection precautions

No. 1 Wire Insulation Stripping P.4

No. 2 Power Terminal Crimping P.5

No. 3 Signal Terminal Crimping P.6

No. 4 Signal Terminal Installation and Front Holder Setting P.7

No. 5 Power Terminal Installation and Front Holder Setting P.8

No. 6 Rear Holder Installation P.9

⚠ No. 7 4.8 Connector Header Assy Installation Into Vehicle P.10

1. Components Part List

No.	Part Name	Part No	Image Form	Function
1	HV 4.8 CONNECTOR 2P HEADER HOUSING MALE SUB ASSEMBLY（M4/M5 SPEC.）	7285-1215-51 7285-1216-51 7285-1217-51	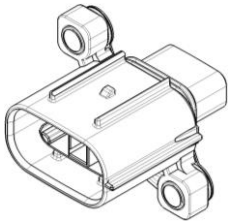	TERMINAL RETENTION
2	RH TYPE TERMINAL FEMALE	7116-4416-02	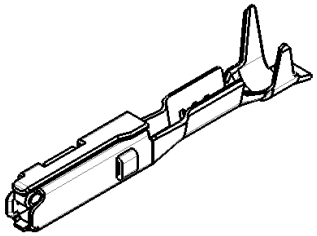	CONNECTION OF ELECTRIC CIRCUIT
3	HV 4.8 CONNECTOR 2P TERMINAL MALE	7185-0905-02	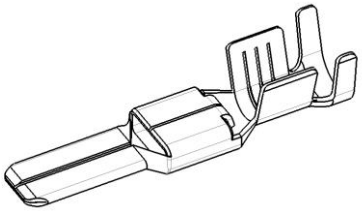	CONNECTION OF ELECTRIC CIRCUIT
4	HV 4.8 CONNECTOR 2P HEADER REAR HOLDER MALE	7185-0795	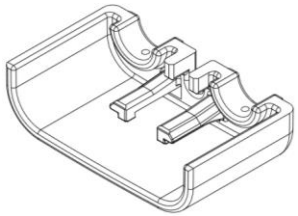	PREVENTS WIRE SEAL FROM DETACHING
5	△3 HV 4.8 CONNECTOR 2P HEADER HOUSING MALE SUB ASSEMBLY（M4 SPEC.)	7285-1962-51 7285-1963-51 7285-1964-51	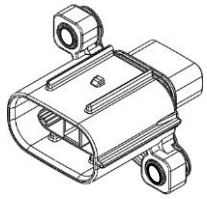	TERMINAL RETENTION

2. Manufacturing process and inspection precautions

No.	1	WIRE Insulation Stripping
Production Method	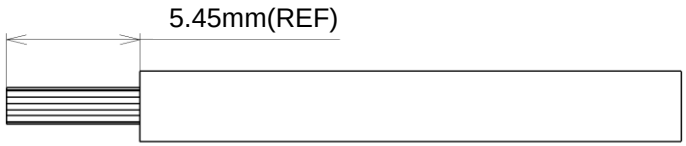 Power Wire Figure 1 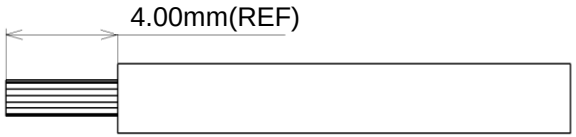 Signal wire Figure 2 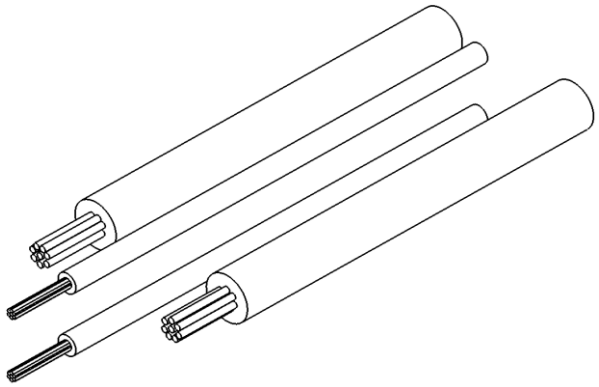	
Part Name	Power Wire, Signal Wire	
Equipment		
Standard	Insulation Strip dimension: ・Power : 5.45mm (Refer to figure 1) ・Signal : 4.00 (Refer to figure 2)	
Inspection Matter	・Insulation strip must be free from any damage.	
Precautions	・Damage in wire strip can cause increase in crimp resistance which may lead to product malfunction.	

2. Manufacturing process and inspection precautions

No.	2	POWER TERMINAL Crimping
Production Method	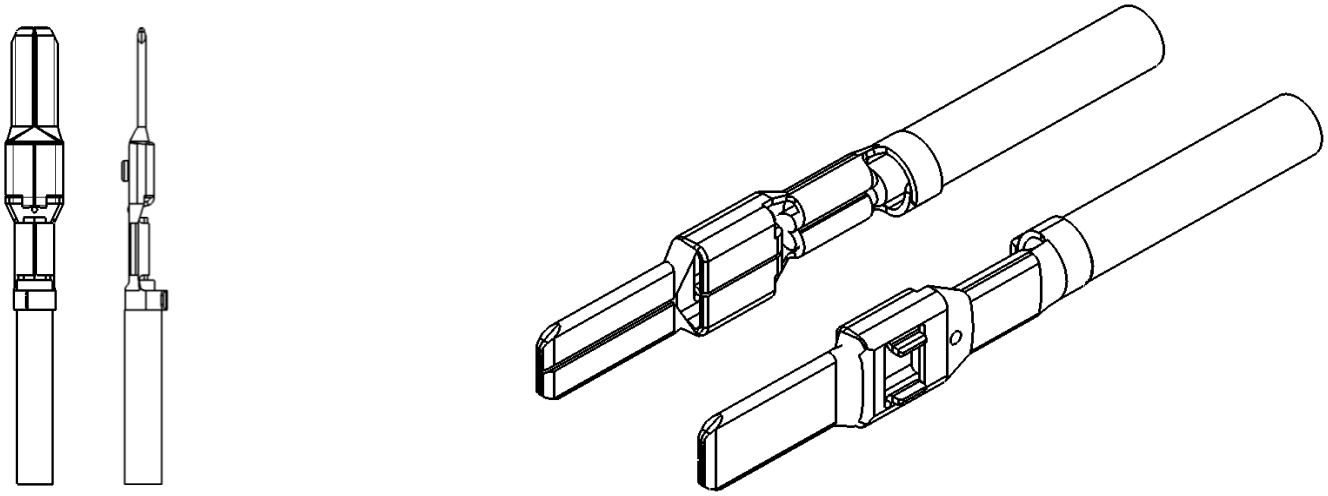	
Part Name	TERMINAL MALE	
Equipment		
Standard	Crimping Standard (Refer to YGT19-0054)	
Inspection Matter	・After crimping there should be no damage on the terminal male. ・No burr after crimping. ・No deformation after crimping.	
Precautions	・Care must be taken not to damage the wire during crimping process. ・Damage on crimp may affect the crimp resistance and retention force which may lead to product malfunction.	

2. Manufacturing process and inspection precautions

No.	3	SIGNAL TERMINAL Crimping
Production Method	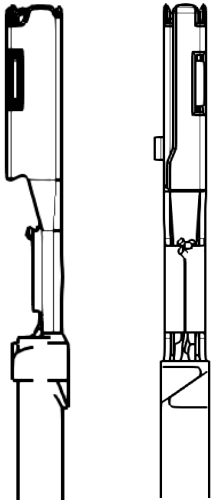 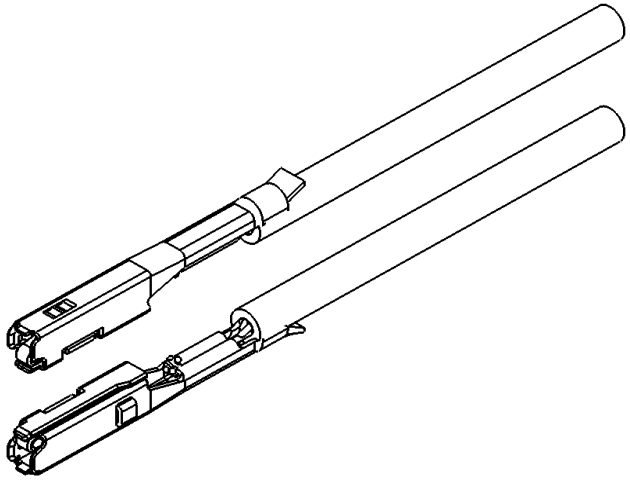	
Part Name	RH TYPE TERMINAL FEMALE	
Equipment		
Standard	Crimping Standard (Refer to YGT19-0054)	
Inspection Matter	・After crimping there should be no damage on the RH type terminal female. ・No burr after crimping. ・No deformation after crimping.	
Precautions	・Care must be taken not to damage the wire during crimping process. ・Damage on crimp may affect the crimp resistance and retention force which may lead to product malfunction.	

2. Manufacturing process and inspection precautions

No.	4	SIGNAL TERMINAL Installation and FRONT HOLDER Setting
Production Method	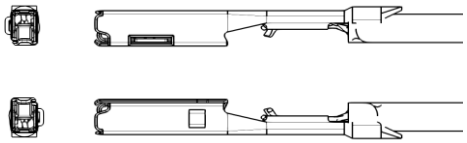 Signal terminal orientation Figure 4 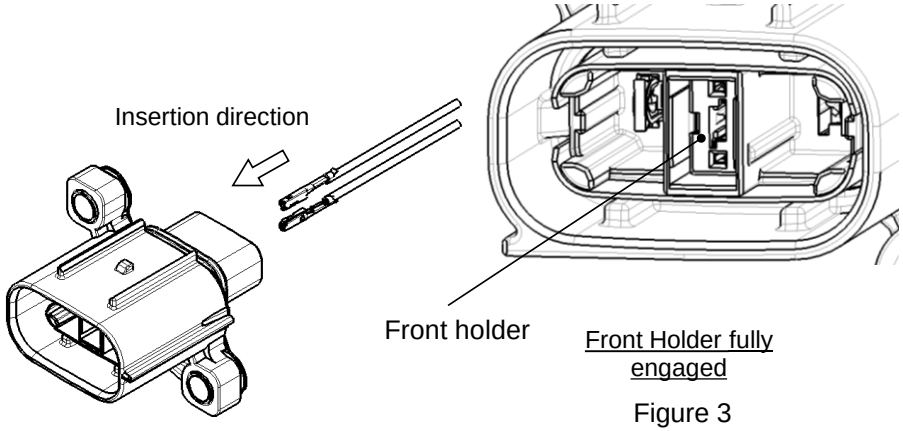 Front Holder fully engaged Figure 3	
Part Name	RH TYPE TERMINAL FEMALE	
Equipment	-	
Standard	-	
Inspection Matter	・The front holder male must be in the pre-set position prior to the installation of terminals. ・Ensure that RH type terminal female was locked to the housing lance. ・There shall be no defects or deformation on front holder male before assembly. ・After installation of all applicable terminals, the front holder male must be moved to the full-lock position. (Refer to figure 3)	
Precautions	・Observe the proper orientation of RH type terminal female before assembly. (Refer to figure 4) ・Insert the RH type terminal female until CLICK sound was heared. ・After inserting the terminal, pull the wire lightly to verify the terminal is locked. ・Do not bend the front holder male lock before assembly. ・If the front holder male is not pushed into the full-lock position smoothly, the terminal may not have been inserted correctly.	

2. Manufacturing process and inspection precautions

No.	5	POWER TERMINAL Installation and FRONT HOLDER Setting
Production Method	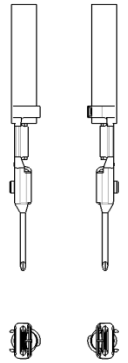 Power Terminal orientation Figure 6 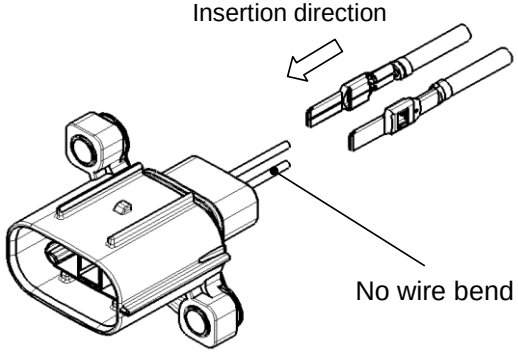 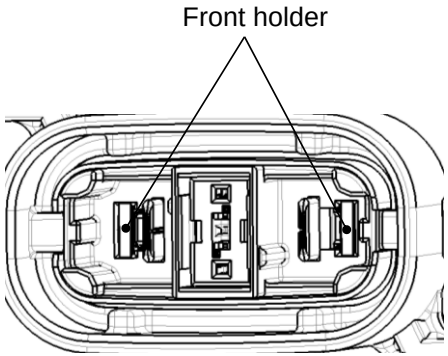 Front holder Fully engaged Figure 5	
Part Name	TERMINAL MALE	
Equipment	-	
Standard	-	
Inspection Matter	・The power front holder must be in the pre-set position prior to the installation of terminals. ・Ensure that terminal male was locked to the housing lance. ・There shall be no defects or deformation on power front holder before assembly. ・After installation of all applicable terminals, the power front holder must be moved to the full-lock position. (Refer to figure 5)	
Precautions	・Observe the proper orientation of terminal male before assembly. (Refer to figure 6) ・Insert the terminal male until CLICK sound was heared. ・After inserting the terminal, pull the wire lightly to verify the terminal is locked. ・Do not bend the power front holder lock before assembly. ・If the power front holder is not pushed into the full-lock position smoothly, the terminal may not have been inserted correctly.	

2. Manufacturing process and inspection precautions

No.	6	REAR HOLDER Installation
Production Method	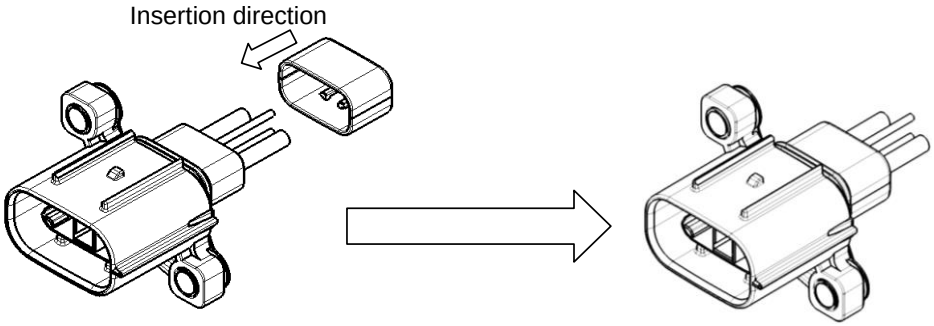 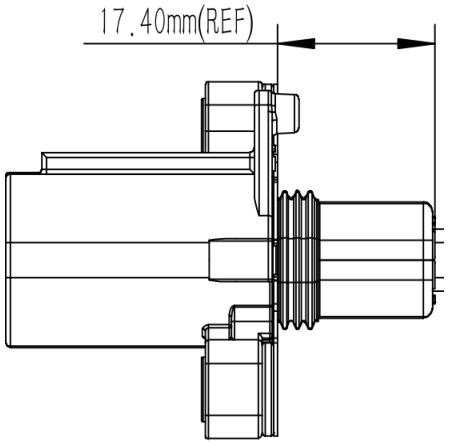 Rear Holder Locked Figure 7	
Part Name	REAR HOLDER MALE	
Equipment	-	
Standard	-	
Inspection Matter	・Ensure the locking of rear holder lock (4 Places) into housing male. (Refer to figure 7)	
Precautions	・Care must be taken not to damage the rear holder male lock (4 places) during installation, Damage on the rear holder male lock (4 places) can lead to product malfunction.	

2. Manufacturing process and inspection precautions

No.	7	4.8 Connector Header Assy Installation Into Vehicle
1 Production Method	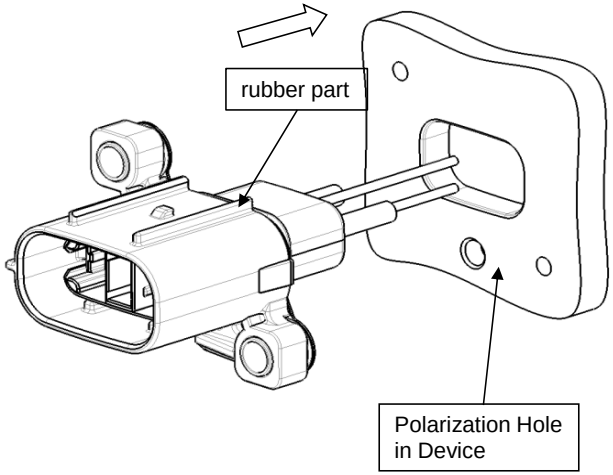 Figure 8 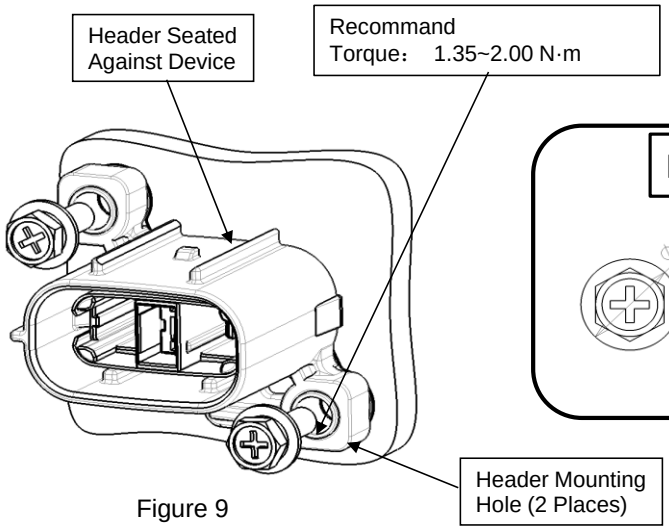 Figure 9 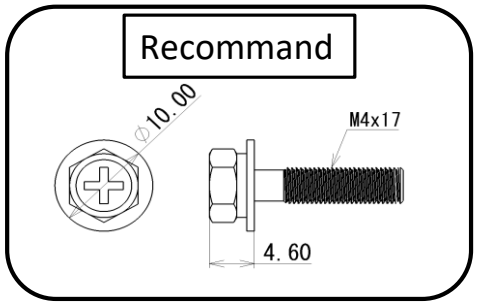 Figure 10	
Part Name	4.8 CONNECTOR HEADER ASSY	
Equipment	-	
Standard	-	
2 Inspection Matter	**STEP 1: WHEN INSERTING THE CONNECTOR** ・Ensure that the connector is perpendicular to the device during installation. **STEP 2: AFTER THE CONNECTOR IS INSERTED** ・Ensure that the connector is free from external force except packing. ・Ensure that the connector is perpendicular to the device. ・The threaded hole can be seen completely from the hole of collar. **STEP 3: TEMPORARY FIXING OF CONNECTOR** ・In the above state, in order to prevent the connector from moving, fasten the connector temporarily. **STEP 4: WHEN TIGHTENING THE FASTENERS** ・During tightening,the connector should avoid offset. ・Make sure that the rubber part is not damaged by the device.(Refer to figure 8) ・Torque： 1.35~2.00 N· m .	
Precautions	・ Prepare the mounting interface (device) according to customer drawing. ・ Check that the seal is present on the header. Align the polarization feature of the header with the polarization hole in the device, then push the header onto the device until it is seated against the face of the device. ・ Obtain two compatibale M4 mounting fasteners. Insert each fastener through a mounting hole in the header and into the hole in the device. Then tighten the fasteners.	

Non-related personnel Secrets
関係者外密

	Handling manual for HV 4.8 CONNECTOR 2P HEADER MALE	YGT19-0057			
	HISTORY				
DATE	CONTENTS	App'd.	Chk'd.	Chk'd.	Prep.
2019.8.14	PRELIMINARY	Haijun.Chen	-	Lijuan.Fan	Lindi.Yang
2020.7.13	ADD THE MANANUFACTURING PROCESS 4.8 CONNECTOR HEADER ASSY INSTALLATION	Haijun.Chen	-	Lijuan.Fan	Haitong.Shen
2020.10.10	CHANGE THE INSPECTION MATTER FOR 4.8 CONNECTOR HEADER ASSY INSTALLATION	Haijun.Chen	-	Lijuan.Fan	Haitong.Shen
2023.01.29	3 ADD HEADER TYPE	Haijun.Chen	-	Lijuan.Fan	Guoqiang.Wang

2. 製造工程及び確認事項

No.	7	4.8 Connector Header 設備側への組付け
1 組付け方法	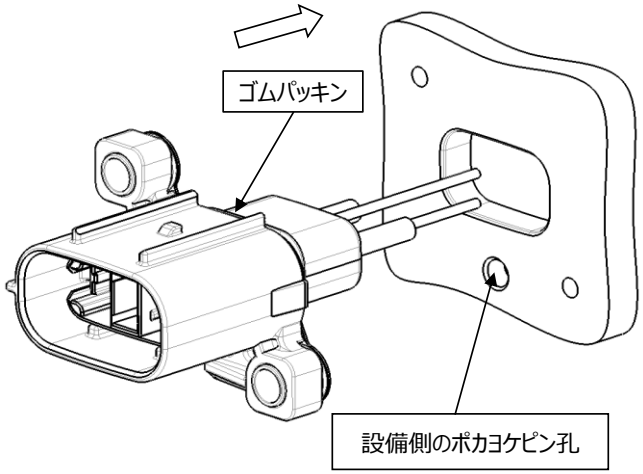 Figure 8 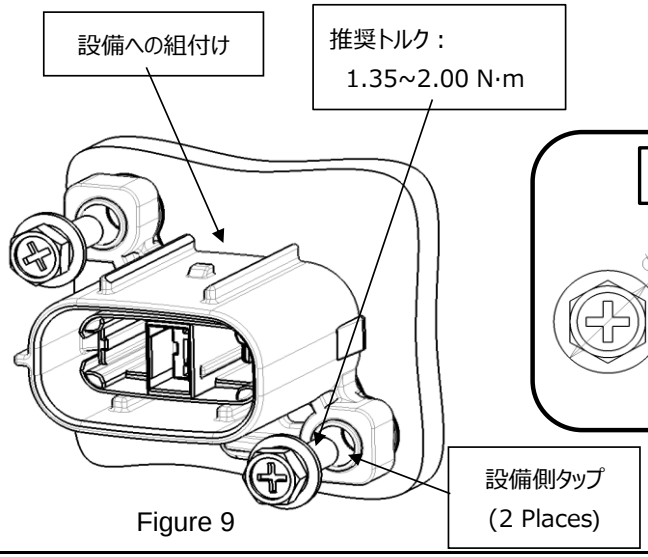 Figure 9 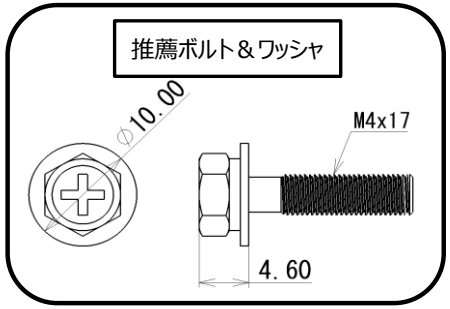 Figure 10	
部品名	4.8 CONNECTOR HEADER ASSY	
設備	-	
規格	-	
2 検査項目	STEP 1: コネクタ挿入時 ・コネクタを垂直に奥まで挿入すること。 STEP 2: コネクタ挿入完了時 ・コネクタにパッキン以外の外力が掛かっていない状態であること。 ・コネクタが垂直になっていること。 ・カラー穴からねじ穴が完全に見えること。 STEP 3: コネクタ仮止め ・上記状態で、コネクタが動かないように仮締めすること。 STEP4: コネクタ本締め ・本締め時には、コネクタがずれないようにすること。 ・ゴムパッキンは設備側に傷つけていないこと。(図8を参照) ・推奨トルク： 1.35~2.00 N·m 。	
注意事項	・ 設備側間口形状はR図に参照すること。 ・ ゴムパッキンの有無、ポカヨケピン孔が正しい位置にある事を確認してからコネクタを設備側間口に挿入すること。 ・ 設備側締付けタップの有無を確認し、M4ボルトを組付け、仮締めしてから本締めをすること。	