YGT19-0058

Non-related personnel Secrets
関係者外密

Handling Manual
for
HV 4.8 CONNECTOR 2P
INLINE

<NOTE>

Please be informed that the contents in this handling manual

may be revised without notice.

YAZAKI (CHINA) INVESTMENT CO.,LTD

SEPT. 16. 2019

This handling manual mentions the minimum items necessary on using this product.
Please observe these written contents when handling.
YAZAKI shall not be liable for any damages resulting from misuse or failure to follow this manual.

Table of Contents

1. Components part list …… P.3 ～ P.4

2. Manufacturing process and inspection precautions

No. 1 Rear Holder and Rubber to Wire Installation …… P.5

No. 2 Wire Insulation Stripping …… P.6

No. 3 Wire Sheath and Braided Shield Stripping …… P.7

No. 4 Shield Terminal and Shield Pipe Installation …… P.8

No. 5 Shield Terminal and Shield Pipe Crimping …… P.9

No. 6 Power Terminal Crimping …… P.10

No. 7 Signal Terminal Crimping …… P.11

No. 8 Signal Terminal Installation and Front Holder Setting …… P.12

No. 9 Power Terminal Installation and Front Holder Setting …… P.13

No.10 Rubber and Rear Holder Installation …… P.14

3.The size of Insertion Tool …… P.15

Non-related personnel Secrets
関係者外密

1. Components Part List

No.	Part Name	Part No	Image Form	Function
1	HV 4.8 CONNECTOR 2P INLINE HOUSING MALE SUB ASSEMBLY	7285-1214-51 7285-1213-51 7285-1401-51	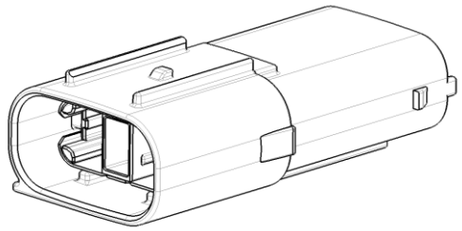	TERMINAL RETENTION
2	RH TYPE TERMINAL FEMALE	7116-4416-02	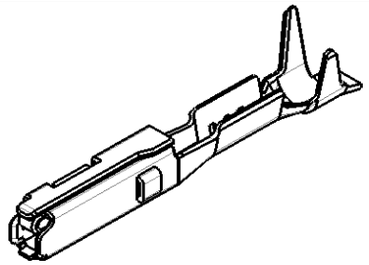	CONNECTION OF ELECTRIC CIRCUIT
3	HV 4.8 CONNECTOR 2P TERMINAL MALE	7185-0905-02	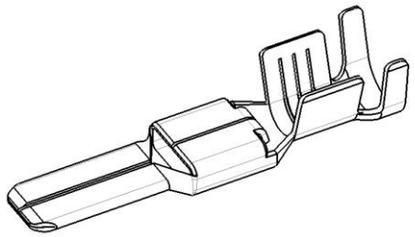	CONNECTION OF ELECTRIC CIRCUIT
4	HV 4.8 CONNECTOR 2P SHIELD TERMINAL	7185-0903-03 7185-0805-03	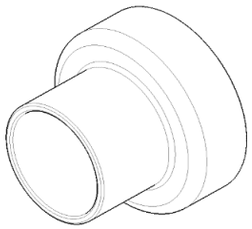	CONNECTION BETWEEN SHIELD SHELL AND BRAIDED WIRE
5	HV 4.8 CONNECTOR 2P SHIELD PIPE	7185-0807 7185-0806	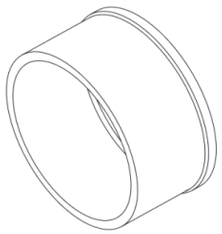	CONNECTION BETWEEN SHIELD TERMINAL AND BRAIDED WIRE

Non-related personnel Secrets
関係者外密

1. Components Part List

No.	Part Name	Part No	Image Form	Function
6	HV 4.8 CONNECTOR 2P RUBBER	7172-5730-80 7172-5731-30	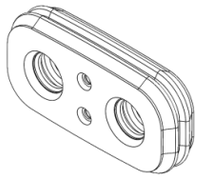	SEALING FOR TERMINALS
7	HV 4.8 CONNECTOR 2P REAR HOLDER	7185-0799 7185-0800-60 7185-0801-51	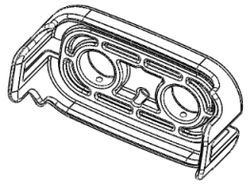	PREVENTS RUBBER FROM DETACHING

2. Manufacturing process and inspection precautions

No.	1	REAR HOLDER and RUBBER to wire Installation
Production Method	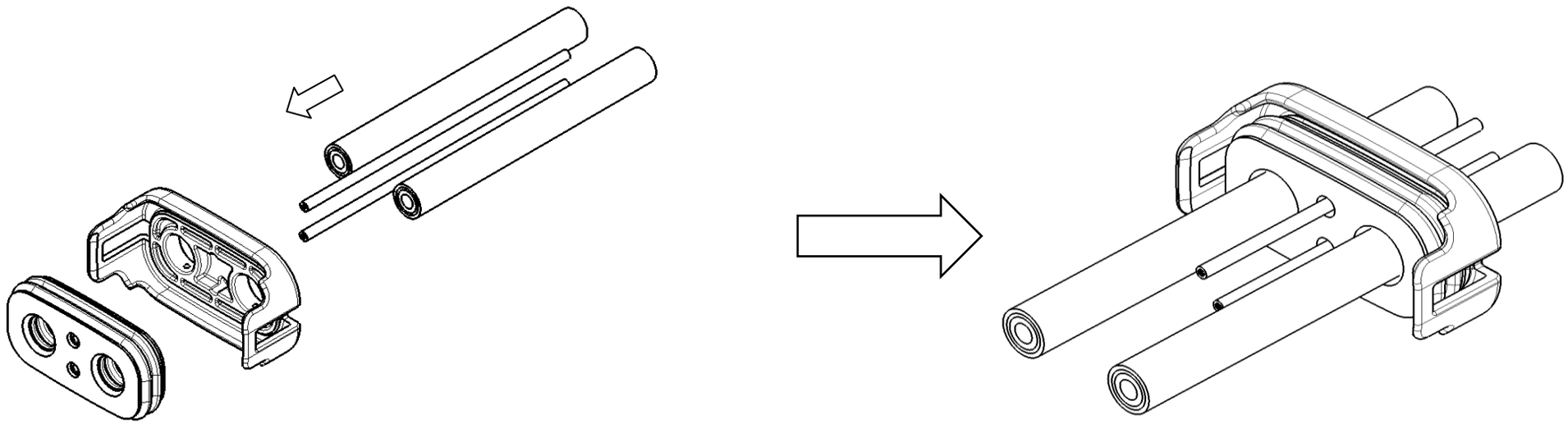	
Part Name	REAR HOLDER, RUBBER, Power Wire, Signal Wire	
Equipment	-	
Standard	-	
Inspection Matter	・There shall be no dust and other foreign object on the rubber. ・There shall be no damage or scratch on the sealing surface of rubber.	
Precautions	・Care must be taken not to damage the seal surface during wire insertion, Damage on the sealing surface can lead to product malfunction	

2. Manufacturing process and inspection precautions

No.	2	WIRE Insulation Stripping
Production Method	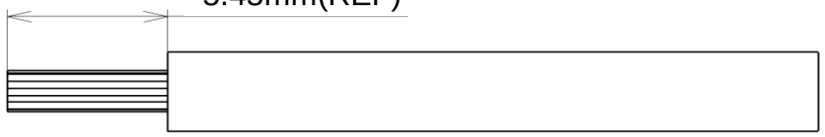 Power Wire Figure 1 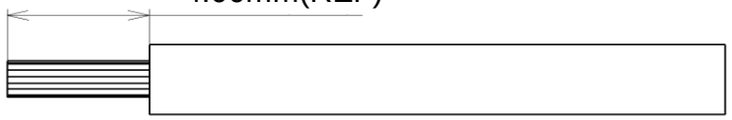 Signal wire Figure 2	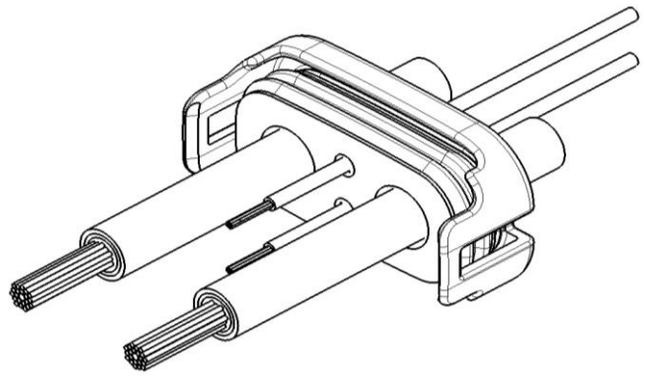
Part Name	Power Wire, Signal Wire	
Equipment	Stripping tools	
Standard	Insulation Strip dimension: ・Power : 5.45mm (Refer to figure 1) ・Signal : 4.00mm (Refer to figure 2)	
Inspection Matter	・Insulation strip must be free from any damage.	
Precautions	・Damage in wire strip can cause increase in crimp resistance which may lead to product malfunction.	

2. Manufacturing process and inspection precautions

No.	3	WIRE Sheath and Braided Shield Stripping
Production Method	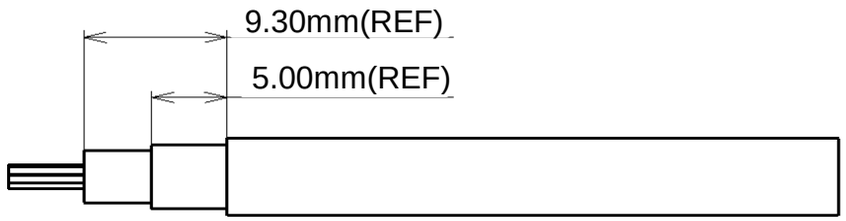 Figure 3 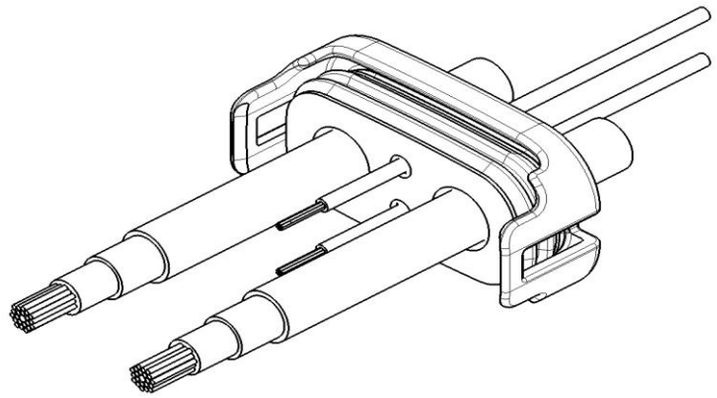	
Part Name	Power Wire	
Equipment	Stripping tools	
Standard	・Insulation Strip dimension: 9.30mm (Refer to figure 3) ・Braided shield length: 5.00mm (Refer to figure 3)	
Inspection Matter	・Insulation and braided shield strip must be free from any damage.	
Precautions	・Damage in wire strip can cause increase in crimp resistance which may lead to product malfunction.	

2. Manufacturing process and inspection precautions

No.	4	SHIELD TERMINAL and SHIELD PIPE Installation
Production Method	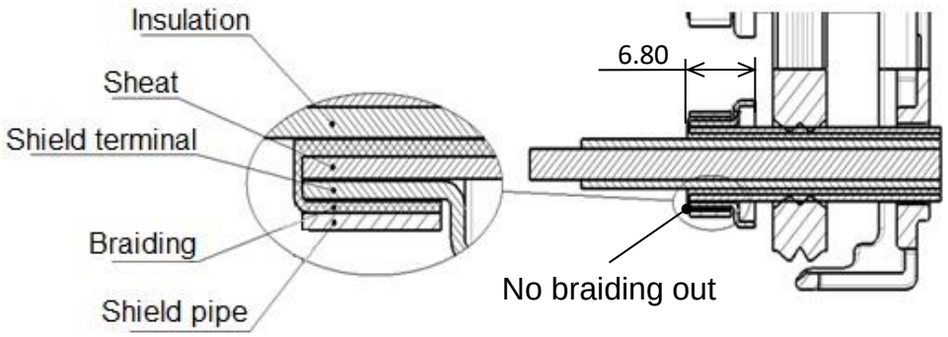 Figure 4 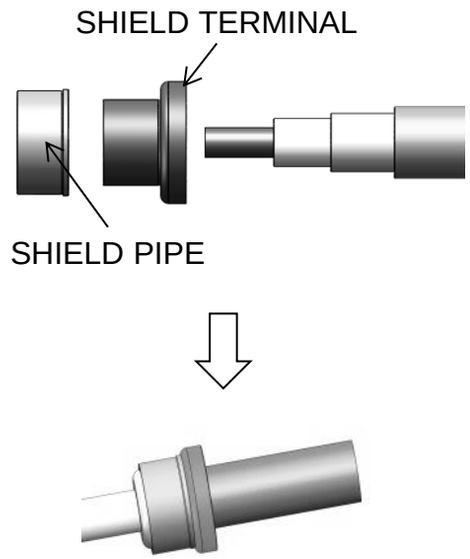	
Part Name	SHIELD TERMINAL, SHIELD PIPE	
Equipment	Crimping Machine	
Standard	Shield Crimping Stantard (Refer to YGT19-0054)	
Inspection Matter	・Braided shield must be properly bended between shield terminal and shield pipe. (Refer to figure 4)	
Precautions	・Care must be taken not to damage the braided shield, damage may cause product malfunction.	

Non-related personnel Secrets
関係者外密

2. Manufacturing process and inspection precautions

No.	5	SHIELD TERMINAL and SHIELD PIPE Crimping
Production Method	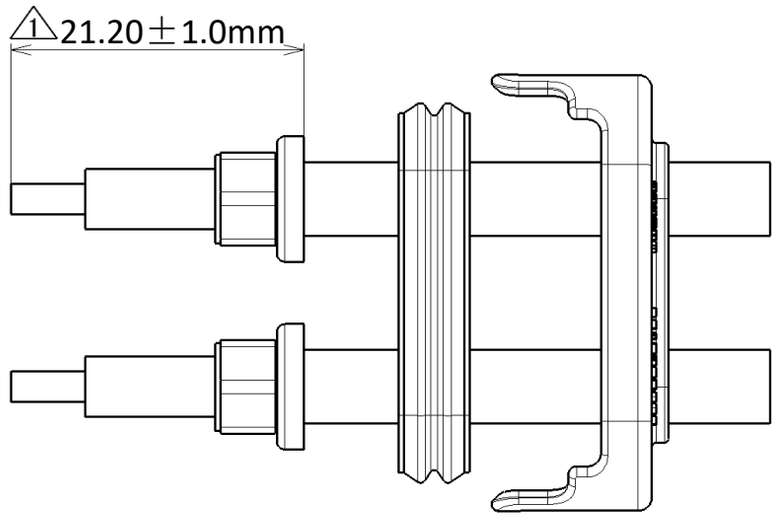 Figure 5	
Part Name	SHIELD TERMINAL, SHIELD PIPE	
Equipment	Crimping machine	
Standard	・Dimension from the tip of the shield terminal to the tip of conductor: 21.20mm (Refer to figure 5)	
Inspection Matter	・There shall be no protruded braided wire. ・There shall be no burr on shield pipe crimped.	
Precautions	・Care must be taken not to damage the rubber and rear holder during crimping process.	

2. Manufacturing process and inspection precautions

No.	6	POWER TERMINAL Crimping
Production Method	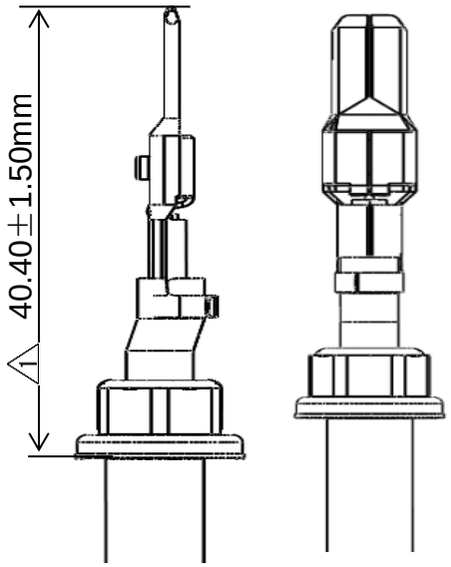 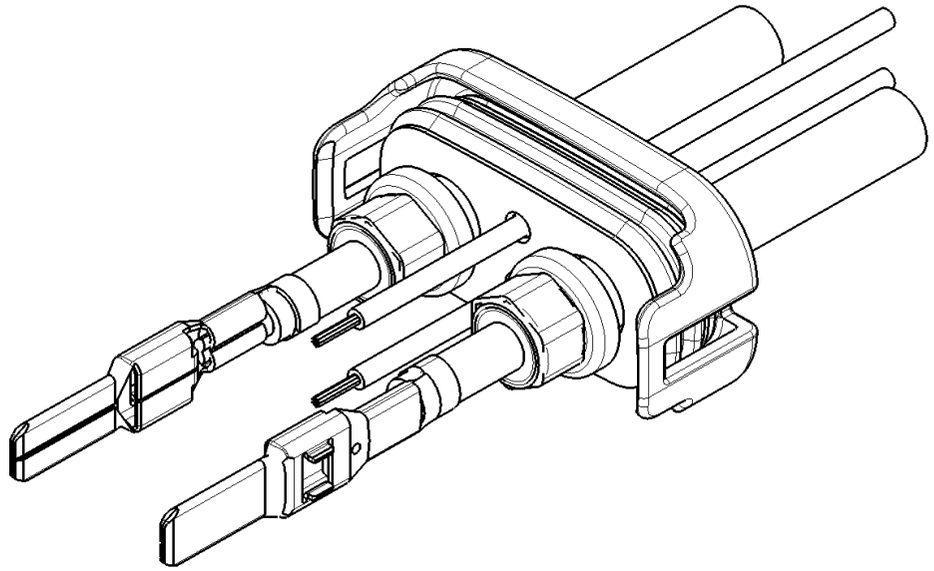	
Part Name	TERMINAL MALE	
Equipment	Crimping Machine	
Standard	Crimping Standard (Refer to YGT19-0054)	
Inspection Matter	・After crimping there should be no damage on the terminal male. ・No burr after crimping. ・No deformation after crimping.	
Precautions	・Care must be taken not to damage the rubber and rear holder during crimping process. ・Damage on crimp may affect the crimp resistance and retention force which may lead to product malfunction.	

Non-related personnel Secrets
関係者外密

2. Manufacturing process and inspection precautions

No.	7	SIGNAL TERMINAL Crimping
Production Method	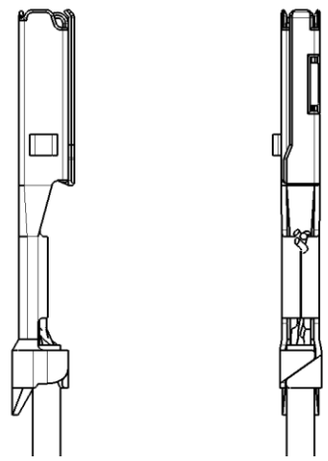 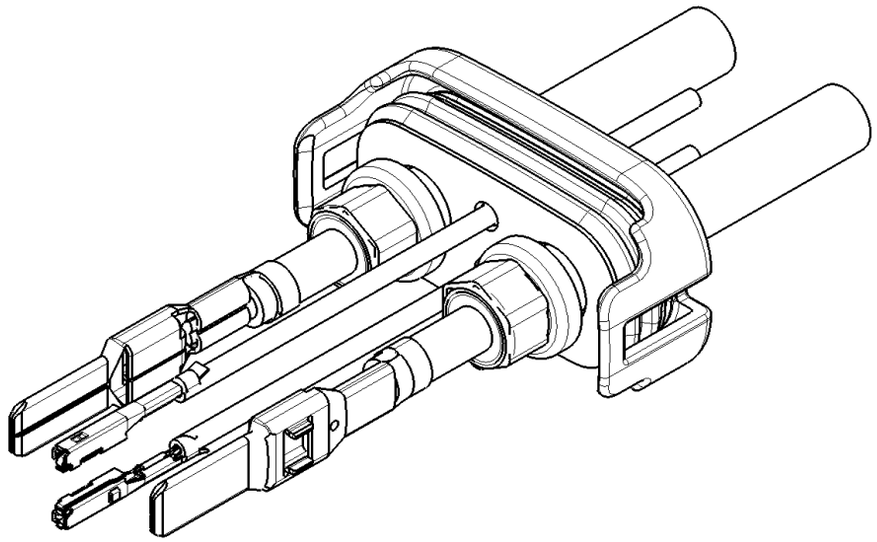	
Part Name	RH TYPE TERMINAL FEMALE	
Equipment	Crimping Machine	
Standard	Crimping Standard (Refer to YGT19-0054)	
Inspection Matter	・After crimping there should be no damage on the RH type terminal female. ・No burr after crimping. ・No deformation after crimping.	
Precautions	・Care must be taken not to damage the wire during crimping process. ・Damage on crimp may affect the crimp resistance and retention force which may lead to product malfunction.	

2. Manufacturing process and inspection precautions

No.	8	SIGNAL TERMINAL Installation and FRONT HOLDER Setting
Production Method	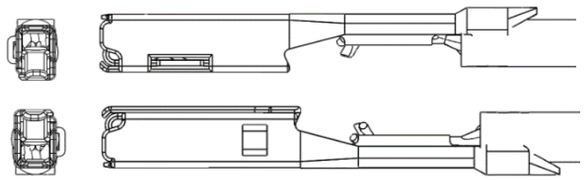 Signal terminal orientation Figure 7 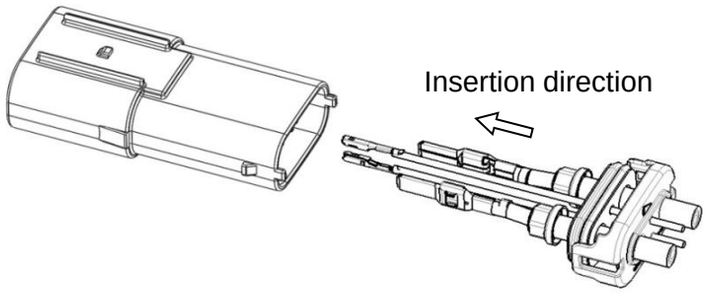 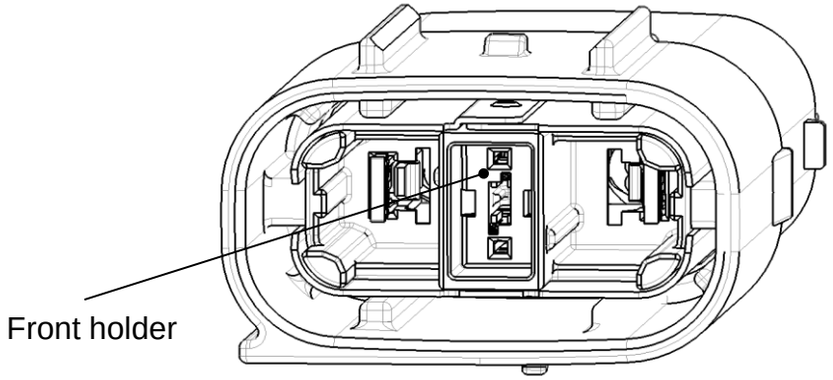 Front holder Fully engaged Figure 6	
Part Name	RH TYPE TERMINAL FEMALE	
Equipment	-	
Standard	-	
Inspection Matter	・The front holder male must be in the pre-set position prior to the installation of terminals. ・Ensure that RH type terminal female was locked to the housing lance. ・There shall be no defects or deformation on front holder male before assembly. ・After installation of all applicable terminals, the front holder male must be moved to the full-lock position. (Refer to figure 6)	
Precautions	・Observe the proper orientation of RH type terminal female before assembly. (Refer to figure 7) ・Insert the RH type terminal female until CLICK sound was heared. ・After inserting the terminal, pull the wire lightly to verify the terminal is locked. ・Do not bend the front holder male lock before assembly. ・If the front holder male is not pushed into the full-lock position smoothly, the terminal may not have been inserted correctly.	

2. Manufacturing process and inspection precautions

No.	9	POWER TERMINAL Installation and FRONT HOLDER Setting
Production Method	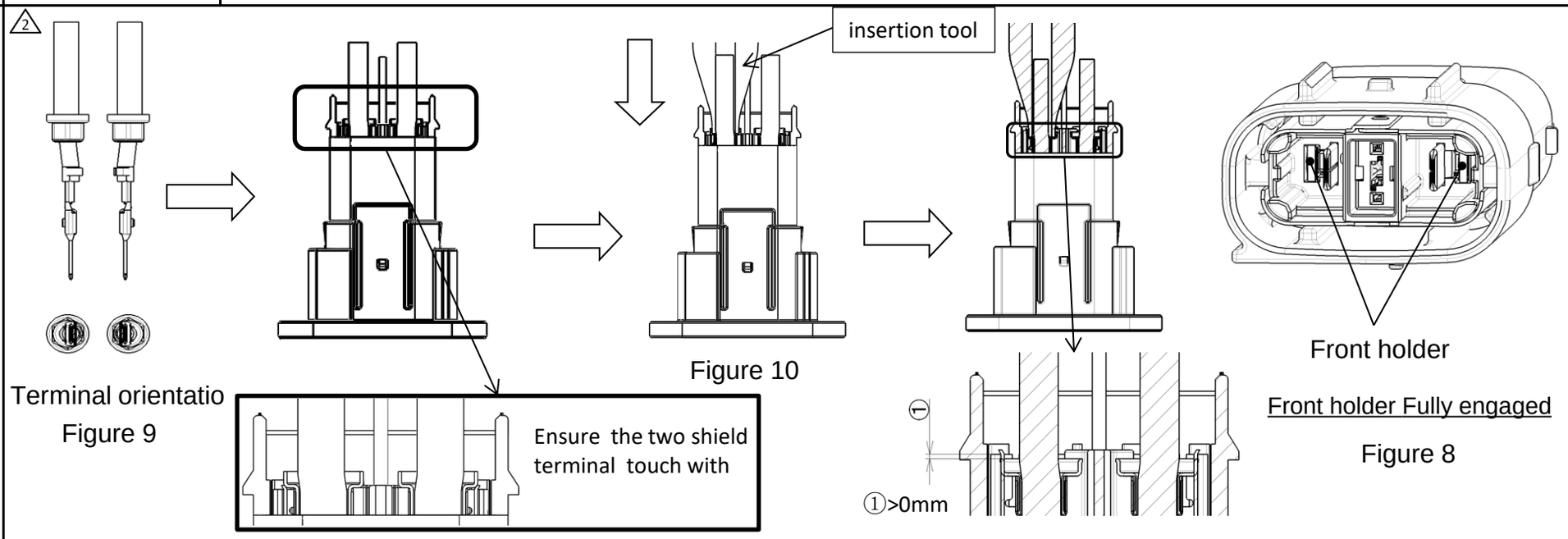	
Part Name	TERMINAL MALE	
Equipment	Insertion Tool (Refer to figure 12)	
Standard	-	
Inspection Matter	・The Power front holder must be in the pre-set position prior to the installation of terminals. ・Ensure that terminal male was locked to the housing lance. ・There shall be no defects or deformation on Power front holder before assembly. ・After installation of all applicable terminals, the Power front holder must be moved to the full-lock position. (Refer to figure 8)	
Precautions	・Observe the proper orientation of terminal male before assembly. (Refer to figure 9) ・Insert the terminal male with insertion tool (75N MAX.) until CLICK sound was heared. (Refer to figure 10) ・After inserting the terminal, pull the wire lightly to verify the terminal is locked. ・Do not bend the Power front holder lock before assembly. ・If the Power front holder is not pushed into the full-lock position smoothly, the terminal may not have been inserted correctly.	

2. Manufacturing process and inspection precautions

No.	10	RUBBER and REAR HOLDER Installation
Production Method	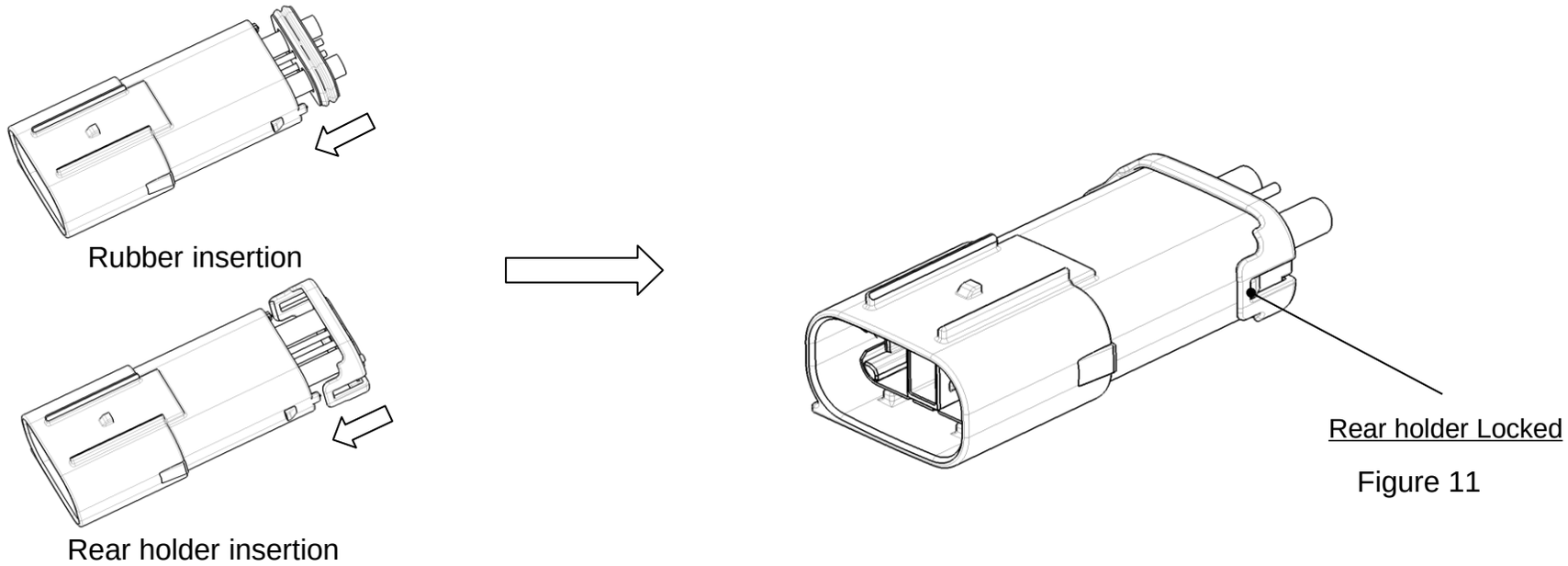 Figure 11	
Part Name	RUBBER, REAR HOLDER	
Equipment	-	
Standard	-	
Inspection Matter	・There shall be no dust and other foreign object on the rubber before installation. ・There shall be no damage on the sealing surface of housing before installation. ・Ensure the locking of rear holder lock (2 Places) into housing. (Refer to figure 11)	
Precautions	・Care must be taken not to damage the rubber during installation, Damage on the rubber can lead to product malfunction.	

3. The size of Insertion Tool

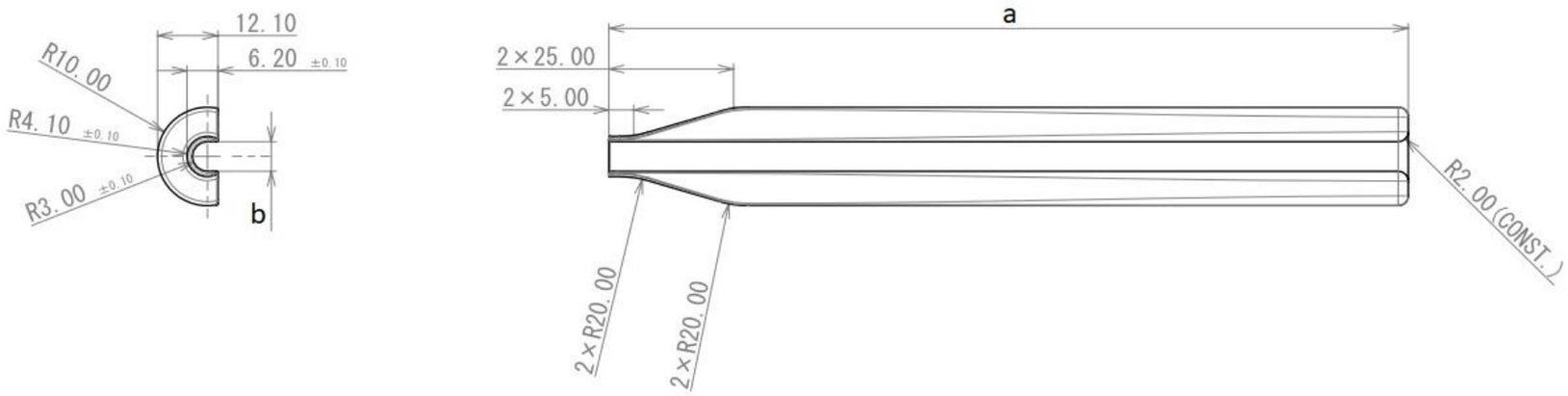

Figure 12

(the dimensions a,b refer to the size of wire)

Non-related personnel Secrets
関係者外密

	Handling manual for HV 4.8 CONNECTOR 2P ASSEMBLY FEMALE (SHORT TERMINAL VERSION)	YGT19-0058			
	HISTORY				
DATE	CONTENTS	App'd.	Chk'd.	Chk'd.	Prep.
2019.8.14	PRELIMINARY	Haijun.Chen	-	Lijuan.Fan	Lindi.Yang
2020.3.20	Add Tolerance	Haijun.Chen	-	Lijuan.Fan	Haitong.Shen
2021.2.2	Power Terminal Installation manufacturing process changed	Haijun.Chen	-	Lijuan.Fan	Zhibin.Ren