SUB ASSMEBLY PART NUMBER	NO.	PART NUMBER	PART NAME	MATERIAL	COLOR	QUANTITY
7382-6379-3R	1	7182-6379-30	10P 1.5 YESC UNSEALED MALE PCB HOUSING	PPA+GF	BLACK	1
	2	7114-4170-R2	1.50 PCB HORIZONTAL TERMINAL (LEAD-FREE COMPLIANT)	BRASS	N/A	5
	3	7114-4171-R2	1.50 PCB HORIZONTAL TERMINAL (LEAD-FREE COMPLIANT)	BRASS	N/A	5
7382-6379-30	1	7182-6379-30	10P 1.5 YESC UNSEALED MALE PCB HOUSING	PPA+GF	BLACK	1
	2	7114-4170-02	1.50 PCB HORIZONTAL TERMINAL	BRASS	N/A	5
	3	7114-4171-02	1.50 PCB HORIZONTAL TERMINAL	BRASS	N/A	5

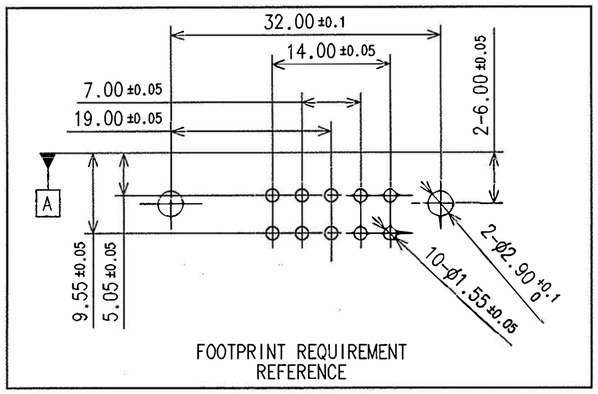

FOOTPRINT REQUIREMENT REFERENCE

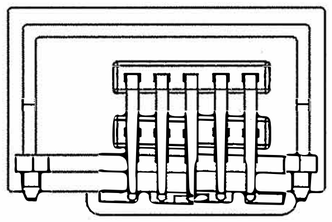

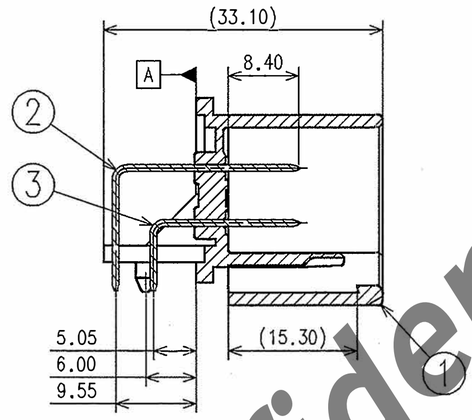

SECTION A-A

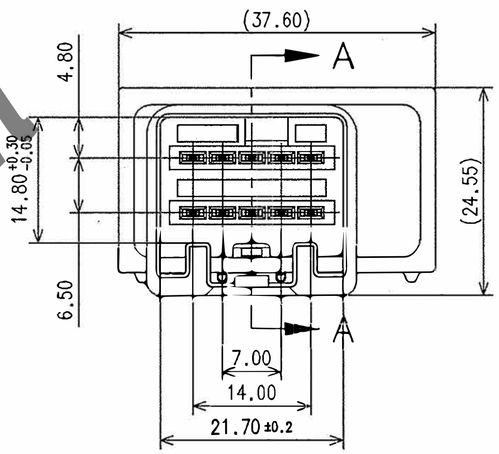

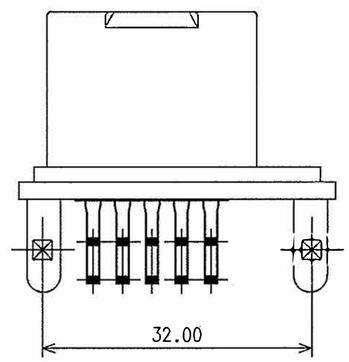

Confidential

NOTES:

1. PARTS MUST BE PURCHASED FROM YAZAKI.
2. PARTS MUST BE FREE OF FLASH AND IMPERFECTIONS THAT AFFECT FUNCTION.
3. MATING PART NUMBER: 7283-6455-40, ETC OR EQUIVALENT
4. PART DESIGNED TO SATISFY USCAR-2, REVISION 3, APRIL 2001, CLASS 2.
5. PART TO COMPLY WITH YPES-31-038 REQUIREMENTS.
6. AFTER BEING PRESSED IN, THE TERMINALS MUST BE FREE OF PLASTIC RESIN.
7. THE TERMINALS MUST NOT BE LOOSE AFTER BEING INSERTED UNDER PRESSURE.
8. THIS DRAWING IS TO BE USED FOR INTERNAL YAZAKI PSW SUBMISSION.

ISSUE MARK

LET	DATE	REVISION RECORD	NO.	CHKD
2	02.11.11	COMBINED LEAD/LEAD-FREE DRAWINGS	C11-A141	JM
1	08.06.09	REMOVE COLOR OPTION	C09-A587	MMR
-	04.28.09	NEW	C09-A211	JMS

GENERAL TOLERANCE

	10 MAX	50 MAX	100 MAX	250 MAX	250 OVR	ANGLE	ECCENT
A	±0.15	±0.2	±0.3	±0.5	±0.75	±30'	0.1
B	±0.2	±0.3	±0.55	±0.95	±1.4	±30'	0.1
C	±0.3	±0.5	±0.8	±1.4	±2	±30'	0.15

SPECIFIED

WEIGHT 9

CUSTOMER	
CUSTOMER PART NO.	CUSTOMER DWG NO.
OFFICE YNA	STDLIB NO.
VENDOR	
VENDOR NO.	

DWG TYPE	DWG SOURCE	DWG DATE	UNIT	SCL	ANGLE
R	7382-6379-3R:M	04.28.09	mm	2/1	3

APPROVED	CHECKED	CHECKED	DESIGN	DRAWN
02.14.11	02.14.11	02.11.11	JASON SIMON 04.28.09	02.11.11

MATL. SPEC. SEE TABLE 1 | TREAT & FIN. N/A

NAME 10P 1.5 YESC UNSEALED MALE PCB ASSEMBLY

PART NO. 7382-6379-3R ETC

DWG NO. 7382-6379-3R:R

YAZAKI CORPORATION