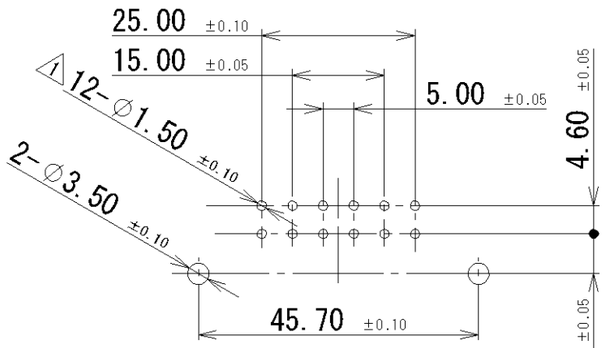

PRINT CIRCUIT BOARD

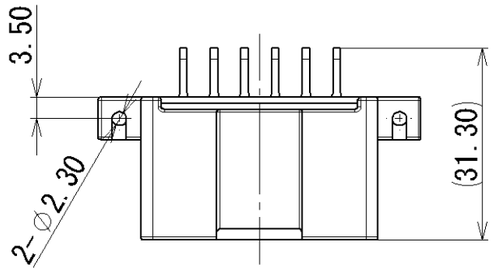

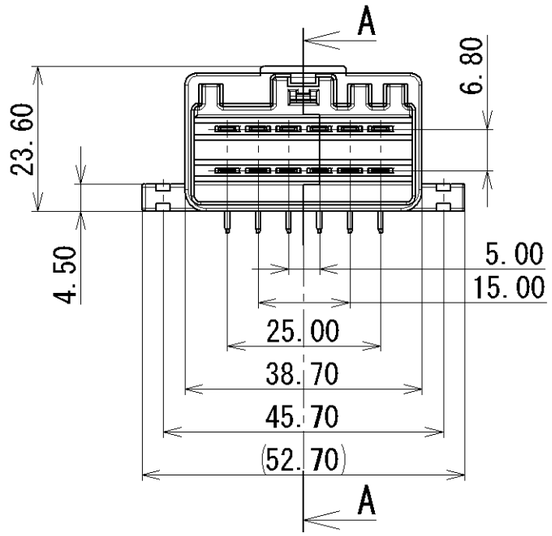

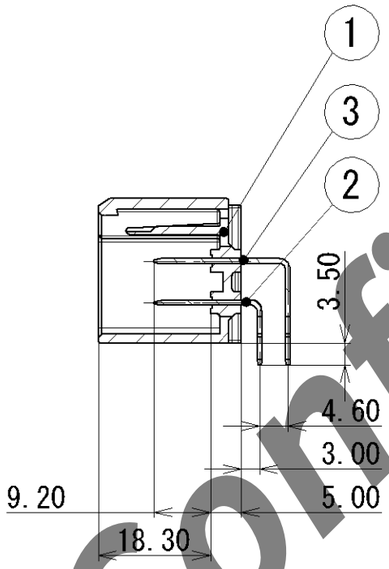

SEC. A-A

SUB ASSEMBLY PART NO. AND CH. CODE	NO.	PART NO. AND CH. CODE	PART NAME	MATERIAL	COLOR	TREAT & FIN.	QTY.
7382-5568-40, A	①	7182-5568-40	2.8 SYSTEM PCB-H 12P (M) HOUSING	PBT-G	LIGHT GRAY	———	1
	②	7114-4182-02	2.8 SYSTEM CONNECTOR PCB(H) TERMINAL (TYPE A)	BRASS	———	TIN PLATED	6
	③	7114-4183-02	2.8 SYSTEM CONNECTOR PCB(H) TERMINAL (TYPE B)	BRASS	———	TIN PLATED	6
7388-2996-60, A	①	7188-2996-60	2.8 SYSTEM PCB-H 12P (M) HOUSING TYPE B	PBT-G	GREEN	———	1
	②	7114-4182-02	2.8 SYSTEM CONNECTOR PCB(H) TERMINAL (TYPE A)	BRASS	———	TIN PLATED	6
	③	7114-4183-02	2.8 SYSTEM CONNECTOR PCB(H) TERMINAL (TYPE B)	BRASS	———	TIN PLATED	6

2 注記

1. かん合相手品番 : 7382-5568-40のかん合相手品番 : 7283-5567-40
   7388-2996-60のかん合相手品番 : 7283-6468-60

2 NOTE

1. MATING PART NO. : MATING PART FOR 7382-5568-40 : 7283-5567-40
   MATING PART FOR 7388-2996-60 : 7283-6468-60

INTERFACE VIEW

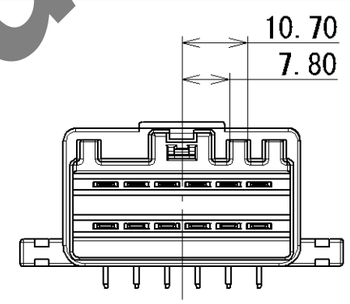

2 7382-5568-40

INTERFACE VIEW

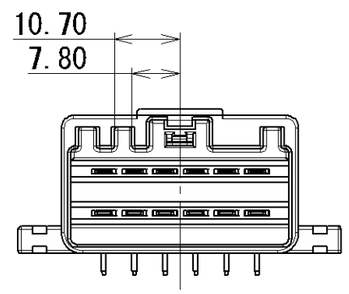

2 7388-2996-60

ISSUE MARK

2	13.10.22	ADDED PART NO., ETC.	C13-Z468	M.H
1	97.06.17	CHANGED TERMINAL ETC. A	C97-M238	H.K
	96.11.16	NEW	C96-N067	H.K
LET	DATE	REVISION RECORD	NO.	CHKD

GENERAL TOLERANCE

	10MAX	50MAX	100MAX	250MAX	2500VR	ANGLE	ECCENT
A	±0.15	±0.2	±0.3	±0.5	±0.75	±30'	0.1
B	±0.2	±0.3	±0.55	±0.95	±1.4	±30'	0.1
C	±0.3	±0.5	±0.8	±1.4	±2	±30'	0.15

SPECIFIED | MASS

CUSTOMER
CUSTOMER PART NO. | CUSTOMER DWG NO.
OFFICE | TRIAL PART NO.
VENDOR
VENDOR NO.

DWG TYPE	DWG SOURCE	DWG DATE	UNIT	SCL	ANGLE
R	NEW	96.11.16	mm	2 1:1	3

APPROVED	CHECKED	CHECKED	DESIGN	DRAWN
K. JINNO	K. OHYAMA	M. KAWAGISHI	T. SUZUKI	M. K. HIGO
13.10.22	13.10.22	13.10.22	96.10.31	13.10.22

MATL. SPEC. SEE TABLE | TREAT. & FIN.

NAME 1 2.8 SYSTEM CONNECTOR
12P PCB(H) ASSEMBLY

PART NO. CH. CODE 2 7382-5568-40 ETC.

DWG NO. 7382-5568-40:R | SET DWG NO.

YAZAKI CORPORATION

Confidential