SUB ASS'Y PART NO.	NO.	PART NO.	MATERIAL(COLOR)	QTY.
7382-5016-60	①	7182-5016-60	PBT (GREEN)	1
	②	7114-1710-02	C2600R TIN PLATING	2
	③	7114-1711-02	C2600R TIN PLATING	1

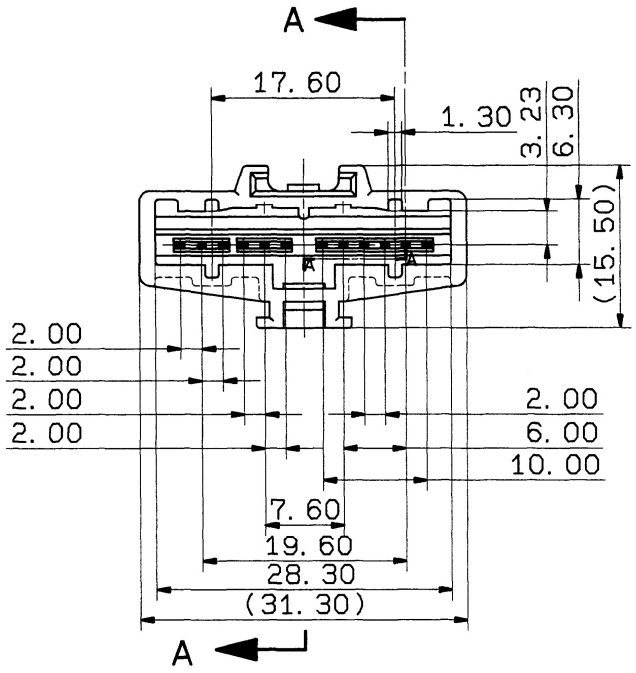

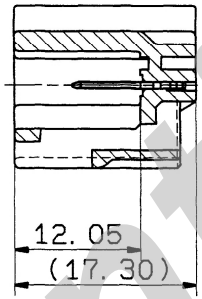

SEC. A-A

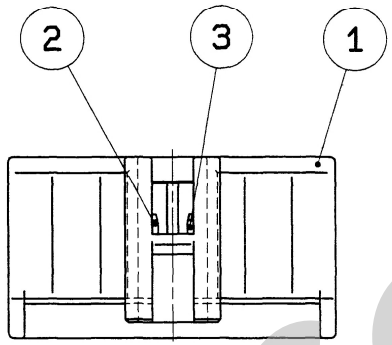

注 記

1. 嵌合相手品番: 7283-5016-60

NOTE

1. MATING PART NO. : 7283-5016-60

ISSUE MARK

LET	DATE	REVISION RECORD	NO.	CHKD
—	93. 05. 20	NEW	C93-L013	K. K

GENERAL TOLERANCE

	10MAX	50MAX	100MAX	250MAX	2500VR	ANGLE	ECCENT
A	±0. 15	±0. 2	±0. 3	±0. 5	±0. 75	±30'	0. 1
B	±0. 2	±0. 3	±0. 55	±0. 95	±1. 4	±30'	0. 1
©	±0. 3	±0. 5	±0. 8	±1. 4	±2	±30'	0. 15

SPECIFIED

MASS g

CUSTOMER

CUSTOMER PART NO. | CUSTOMER DWG NO.

OFFICE | TRIAL PART NO.

VENDOR

VENDOR NO.

DWG TYPE	DWG SOURCE	DWG DATE	UNIT	SCL	ANGLE
R	NEW	93. 05. 20	mm	2/1	3

APPROVED	CHECKED	CHECKED	DESIGN	DRAWN
高东	酒井	増田	KOUYAMA	神山
93.06.07	93. 5. 27	93. 5. 26	93. 05. 20	93.05.20

MATL. SPEC. SEE TABLE | TREAT. & FIN.

NAME A TYPE JOINT CONNECTOR
12P MALE ASS'Y (G)

PART NO. 7382-5016-60

DWG NO. 7382-5016-60:R

YAZAKI CORPORATION

Confidential