ASM. P. NO.	① HOUSING		② TERMINAL	
YAZAKI NO.	MATERIAL	QUANTITY	MATERIAL	QUANTITY
7382-4023-30	PBT (BLACK)	1	BRASS TIN PLATING	22

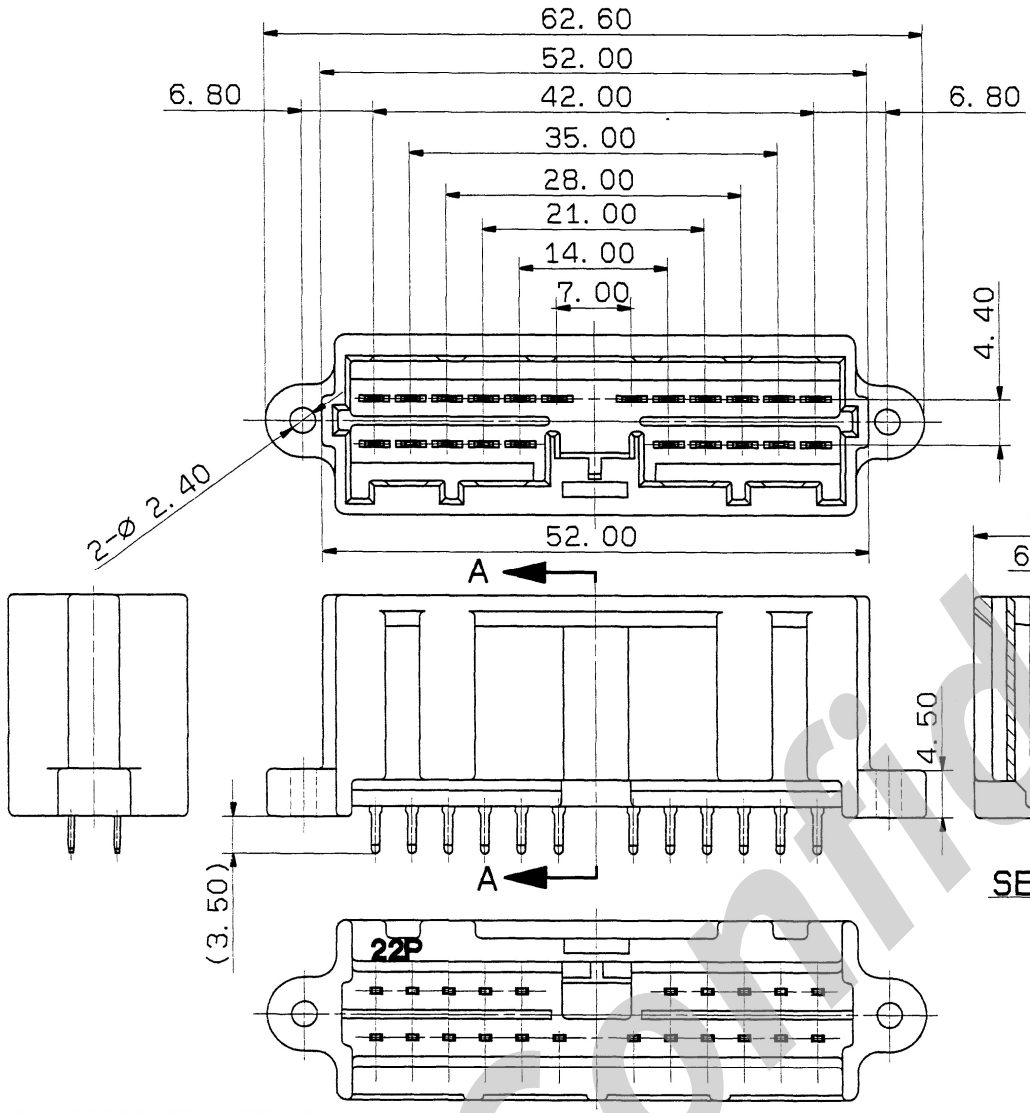

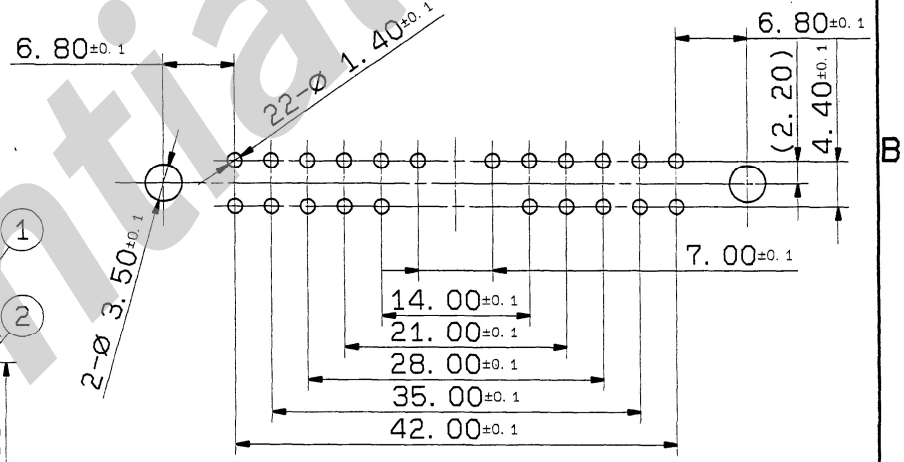

PRINT CIRCUIT BOARD

⚠1 注記
1. 嵌合相手品番：7323-8325-30
2. プリント基板固定用ネジ ： M3XL8ナベ2種(推奨サイズ).
： M3XL8サラ1種(推奨サイズ).
3. 締め付けトルクは39.2~49.0N・cm{4~5kgf・cm}とする.

⚠NOTES
1. MATING PART NO. :7323-8325-30
2. FASTENING SCREW
: M3XL8 PAN HEAD SECOND CLASS(RECOMMEND)
: M3XL8 COUNTERSUNK HEAD FIRST CLASS(-DO-)
3. TIGHTENING TORQUE:39.2~49.0N・cm{4~5kgf・cm}

ISSUE MARK

LET	DATE	REVISION RECORD	NO.	CHKD
⚠1	92.07.09	ADDED NOTES	C92-L392	H.F
	92.04.06	NEW	C92-6348	K.S

GENERAL TOLERANCE

	10MAX	50MAX	100MAX	250MAX	2500VR	ANGLE	ECCENT
A	±0.15	±0.2	±0.3	±0.5	±0.75	±30'	0.1
B	±0.2	±0.3	±0.55	±0.95	±1.4	±30'	0.1
Ⓒ	±0.3	±0.5	±0.8	±1.4	±2	±30'	0.15

SPECIFIED

MASS g

CUSTOMER						
CUSTOMER PART NO.		CUSTOMER DWG NO.				
OFFICE		TRIAL PART NO.				
VENDOR		7V9122-7973				
VENDOR NO.						
DWG TYPE	DWG SOURCE	DWG DATE	UNIT	SCL	ANGLE	
R	NEW	92.04.06	mm	2/1	3	
APPROVED	CHECKED	CHECKED	DESIGN	DRAWN		
遠藤	稲葉	高瀬	SADAISHI	ISHIZUKA 貞石		
'92.7.23	'92.07.20	'92.7.20	91.08.01	92.07.09		

MATL. SPEC.	SEE TABLE
TREAT. & FIN.	
NAME	SDL PCB-V CONNECTOR ASS'Y 22P MALE
PART NO.	7382-4023-30
DWG NO.	7382-4023-30:R
	YAZAKI CORPORATION

Confidential