© COPYRIGHT. THIS DRAWING HAS COPYRIGHT AND MAY NOT BE COPIED IN WHOLE OR IN PART OR USED FOR ANY PURPOSE OTHER THAN FOR WHICH IT IS SUPPLIED WITHOUT EXPRESS WRITTEN CONSENT OF YAZAKI EUROPE LIMITED.

CODING OVERVIEW

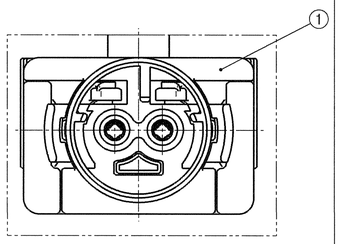

CODE I
COLOR: BLACK
PART NO: 7329-5197-30

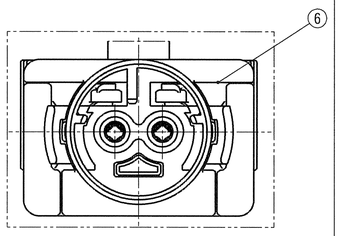

CODE II
COLOR: GREEN
PART NO: 7329-5198-60

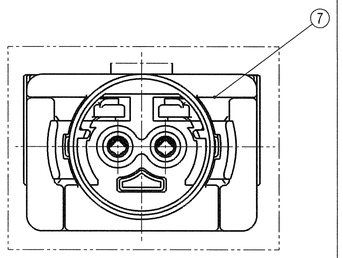

CODE III
COLOR: YELLOW
PART NO: 7329-5199-70

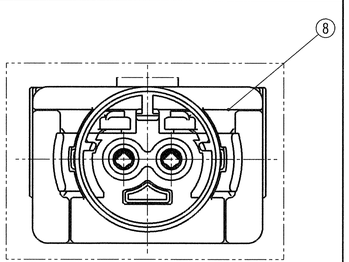

CODE IV
COLOR: PURPLE
PART NO: 7329-5290-20

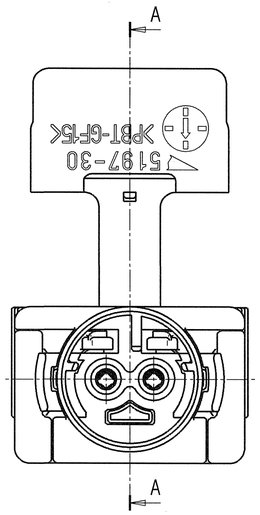

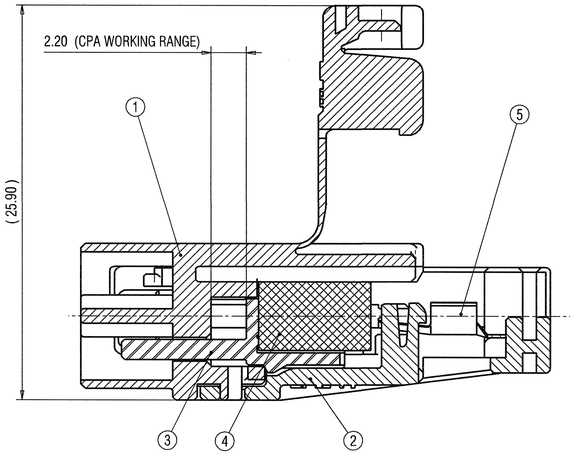

SECTION A-A

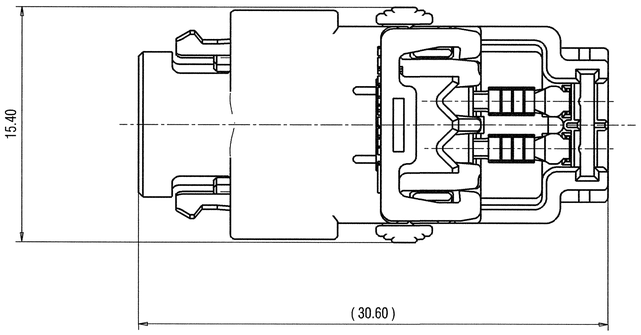

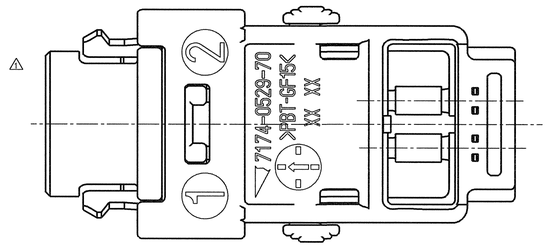

CONNECTOR WITH COVER CLOSED AFTER CRIMPING

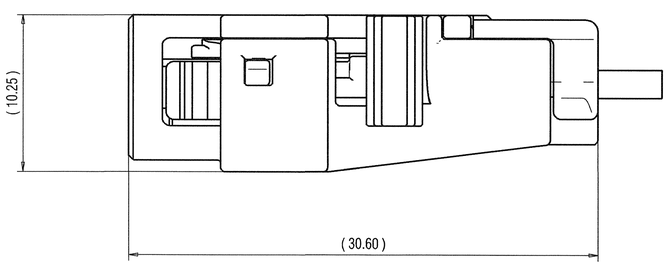

TABLE 1

SUBASSEMBLY PART NO.	NO.	PART NO.	PART NAME	MATERIAL	COLOR	QTY
7329-5197-30	1	7129-5197-30	1.00mm NWP SYSTEM AK2 CONNECTOR 2P (F) HOUSING 180° CODE I	PBT-GF15	BLACK	1
	2	7174-0529-70	1.00mm NWP SYSTEM AK2 CONNECTOR 2P (F) COVER 180°	PBT-GF15	YELLOW	1
	3	7172-0617-50	1.00mm NWP SYSTEM AK2 CONNECTOR 2P (F) CPA 180°	PBT-GF20	ORANGE	1
	4	7181-5820	1.00mm NWP SYSTEM AK2 CONNECTOR 2P (F) FERRITE	NON CONDUCTIVE	-	1
	5	7115-2766-08	1.00mm NWP SYSTEM AK2 CONNECTOR 2P (F) TERMINAL 180°	CuNiSi	-	2
7329-5198-60	6	7129-5198-60	1.00mm NWP SYSTEM AK2 CONNECTOR 2P (F) HOUSING 180° CODE II	PBT-GF15	GREEN	1
	2	7174-0529-70	1.00mm NWP SYSTEM AK2 CONNECTOR 2P (F) COVER 180°	PBT-GF15	YELLOW	1
	3	7172-0617-50	1.00mm NWP SYSTEM AK2 CONNECTOR 2P (F) CPA 180°	PBT-GF20	ORANGE	1
	4	7181-5820	1.00mm NWP SYSTEM AK2 CONNECTOR 2P (F) FERRITE	NON CONDUCTIVE	-	1
	5	7115-2766-08	1.00mm NWP SYSTEM AK2 CONNECTOR 2P (F) TERMINAL 180°	CuNiSi	-	2
7329-5199-70	7	7129-5199-70	1.00mm NWP SYSTEM AK2 CONNECTOR 2P (F) HOUSING 180° CODE III	PBT-GF15	YELLOW	1
	2	7174-0529-70	1.00mm NWP SYSTEM AK2 CONNECTOR 2P (F) COVER 180°	PBT-GF15	YELLOW	1
	3	7172-0617-50	1.00mm NWP SYSTEM AK2 CONNECTOR 2P (F) CPA 180°	PBT-GF20	ORANGE	1
	4	7181-5820	1.00mm NWP SYSTEM AK2 CONNECTOR 2P (F) FERRITE	NON CONDUCTIVE	-	1
	5	7115-2766-08	1.00mm NWP SYSTEM AK2 CONNECTOR 2P (F) TERMINAL 180°	CuNiSi	-	2
7329-5290-20	8	7129-5290-20	1.00mm NWP SYSTEM AK2 CONNECTOR 2P (F) HOUSING 180° CODE IV	PBT-GF15	PURPLE	1
	2	7174-0529-70	1.00mm NWP SYSTEM AK2 CONNECTOR 2P (F) COVER 180°	PBT-GF15	YELLOW	1
	3	7172-0617-50	1.00mm NWP SYSTEM AK2 CONNECTOR 2P (F) CPA 180°	PBT-GF20	ORANGE	1
	4	7181-5820	1.00mm NWP SYSTEM AK2 CONNECTOR 2P (F) FERRITE	NON CONDUCTIVE	-	1
	5	7115-2766-08	1.00mm NWP SYSTEM AK2 CONNECTOR 2P (F) TERMINAL 180°	CuNiSi	-	2

NOTES:
1. MATERIAL: SEE TABLE 1;
2. COLOR: SEE TABLE 1;
3. MATING PRODUCT ACCORDING USCAR DRAWING 999-U-002-I-Z03 REVISION LEVEL B;
4. FOR GENERAL GEOMETRICAL TOLERANCE SEE TABLE (ECCENT=ECCENTRICITY);
△5. HANDLING MANUAL: YPES-15-1292E;
△6. PRODUCT STANDARD: YPES-11-05-304E;
7. THE MATERIALS USED IN THIS PRODUCT ARE IN CONFORMITY WITH REQUIREMENTS OF EU ELV 2000/53/EC DIRECTIVE AND ASSOCIATED DOCUMENTS
8. CONNECTOR IS SUPPLIED IN THE CONDITION SHOWN READY FOR CRIMPING TO WIRES;
9. CONNECTOR SHOULD BE CRIMPED ONLY TO THE WIRE SPECIFIED IN THE TABLE 2. USING SPECIAL CRIMPING EQUIPMENT SUPPLIED BY A YAZAKI APPROVED VENDOR. CONTACT YAZAKI FOR DETAILS;
△10. WHITE LINES IN HINGE AREA ARE ACCEPTED AFTER COVER IS CLOSED.

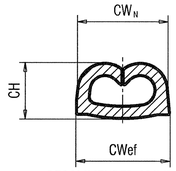

RECOMMENDED CRIMP SHAPE
CONDUCTOR CRIMP

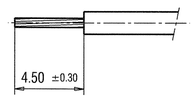

WIRE STRIPPING DETAIL

APPLICABLE WIRE TYPE AND SIZE	RECOMMENDED CRIMP DIMENSIONS			
FLRY-A	CH	CW_N	CW_{ef}	CRIMP TYPE
0.50 mm^2	$0.95_{\pm 0.04}$	1.40	$1.52_{\pm 0.05}$	B
△ 0.35mm^2	$0.87_{\pm 0.03}$	1.40	$1.52_{\pm 0.05}$	B

TABLE 2. RECOMMENDED CRIMP DIMENSIONS FOR THE WIRE SIZE SHOWN

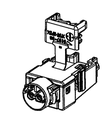

ISOMETRIC VIEW
(SCALE 1:1)

LET	DATE	REVISION RECORD	NO.	CHKD
△	11.05.2017.	UPDATED NOTES	Y17-0441	M.V.
△	27.10.2015.	UPDATED CRIMP DIMENSIONS,VIEW,TABLE & NOTES	Y15-0580	M.V.
—	05.09.2011.	NEW	Y11-0656	G.G.

PRINTED COPIES ARE UNCONTROLLED. THEY ARE POTENTIALLY OUT-OF-DATE AND INVALID. DATABASE IS MASTER.

GENERAL TOLERANCE							
	10MAX	50MAX	100MAX	250MAX	2500VR	ANGLE	ECCENT
A	±0.15	±0.2	±0.3	±0.5	±0.75	±30'	0.1
B	±0.2	±0.3	±0.55	±0.95	±1.4	±30'	0.1
Ⓒ	±0.3	±0.5	±0.8	±1.4	±2	±30'	0.15
SPECIFIED					MASS	4.2g	

CUSTOMER			
CUSTOMER PART NO.		CUSTOMER DWG NO.	
OFFICE		TRIAL PART NO.	
VENDOR			
VENDOR NO.			

DWG TYPE	DWG SOURCE	DWG DATE	UNIT	SCL	ANGLE
R	NEW	05.09.2011.	mm	5/1	3

APPROVED	CHECKED	CHECKED	DESIGN	DRAWN
G.GREGURIC	M.VALJAK	T.SALINOVIC	G.P.POLJAK	D.MATESIC
12.5.2017	12.05.2017.	12.05.2017.	12.08.2010.	11.05.2017.

MATL. SPEC.	SEE NOTES
TREAT. & FIN.	SEE NOTES
NAME	1.00mm NWP SYSTEM AK2 CONNECTOR 2P (F) SUBASSEMBLY 180° CODE I, II, III & IV
PART NO.	7329-5197-30, ETC.
CH. CODE	
DWG NO.	7329-5197-30:R
SET DWG NO.	

ISSUE MARK

YAZAKI

A1