ASM. P. NO.	① HOUSING		② TERMINAL	
YAZAKI NO.	MATERIAL	QUANTITY	MATERIAL	QUANTITY
7322-8501	PBT(NATURAL)	1	BRASS TIN PLATING	20
⚠1 7322-8501-30	PBT(BLACK)			

⚠2 注記 ⚠1

1. 嵌合相手品番：7323-8306, 7323-8306-30
2. プリント基板固定用ネジ ： M3XL8ナベ2種(推奨サイズ).
   ： M3XL8サラ1種(推奨サイズ).
3. 締め付けトルクは39.2~49.0N・cm{4~5kgf・cm}とする.

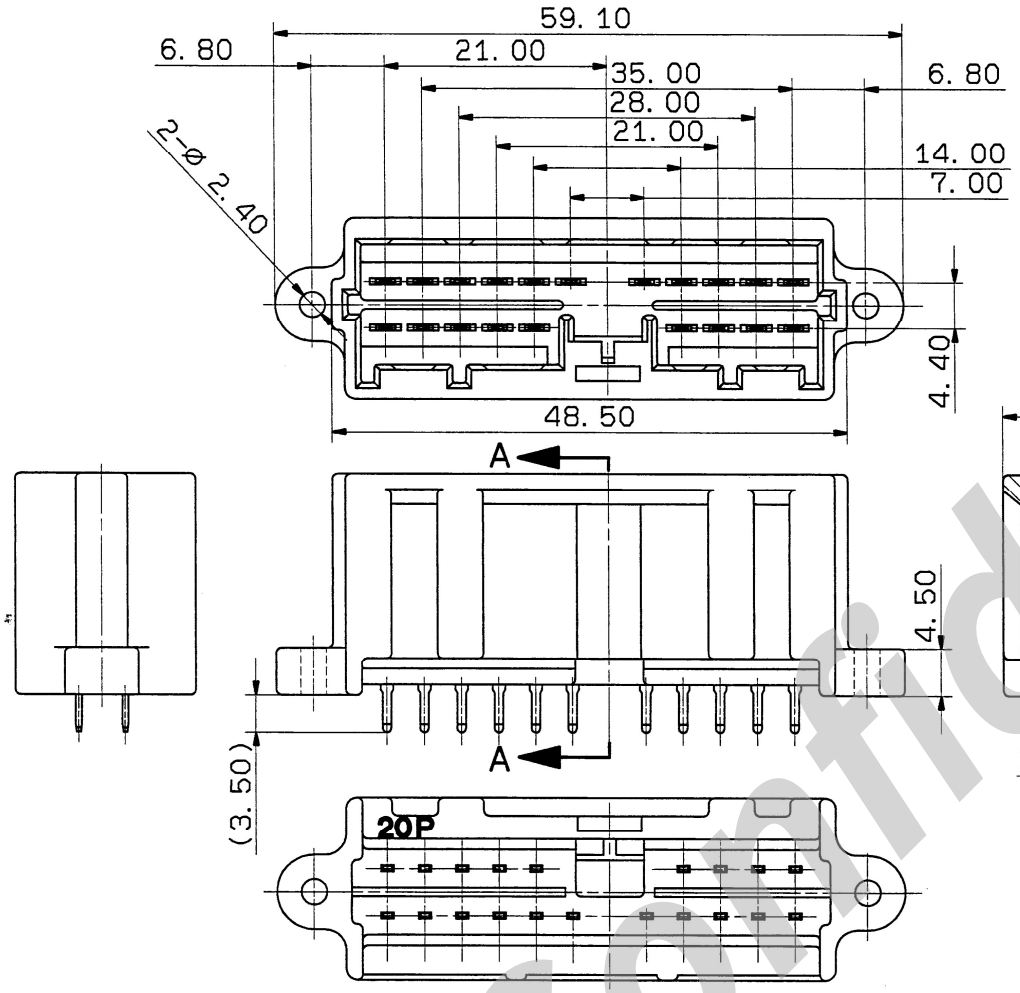

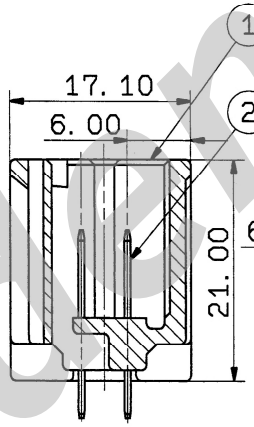

⚠2 NOTES ⚠1

1. MATING PART NO. : 7323-8306, 7323-8306-30
2. FASTENING SCREW
   : M3XL8 PAN HEAD SECOND CLASS(RECOMMEND)
   : M3XL8 COUNTERSUNK HEAD FIRST CLASS(-DO-)
3. TIGHTENING TORQUE : 39.2~49.0N・cm{4~5kgf・cm}

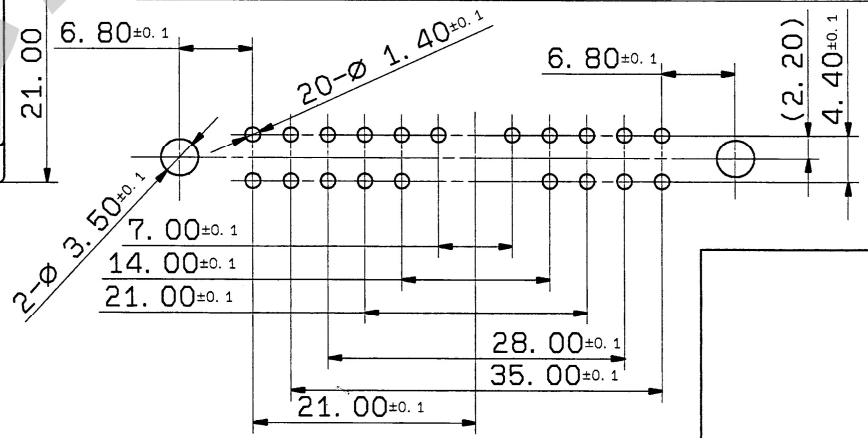

PRINT CIRCUIT BOARD

ISSUE MARK

LET	DATE	REVISION RECORD	NO.	CHKD
⚠2	92.07.09	ADDED NOTES	C92-L388	H.F
⚠1	92.05.28	ADDED PART NO.	C92-6527	K.S
	92.04.06	NEW	C92-6346	K.S

GENERAL TOLERANCE

	10MAX	50MAX	100MAX	250MAX	2500VR	ANGLE	ECCENT
A	±0.15	±0.2	±0.3	±0.5	±0.75	±30'	0.1
B	±0.2	±0.3	±0.55	±0.95	±1.4	±30'	0.1
C	±0.3	±0.5	±0.8	±1.4	±2	±30'	0.15

SPECIFIED

MASS 11.9 g

CUSTOMER		
CUSTOMER PART NO.	CUSTOMER DWG NO.	
OFFICE	TRIAL PART NO.	
VENDOR	7V9122-7969	
VENDOR NO.		

DWG TYPE	DWG SOURCE	DWG DATE	UNIT	SCL	ANGLE
R	NEW	92.04.06	mm	2/1	3

APPROVED	CHECKED	CHECKED	DESIGN	DRAWN
立石 '92.7.23	稲葉 '92.07.20	高瀬 '92.7.20	SADAISHI 91.08.05	ISHIZUKA 貞石 92.07.09

MATL. SPEC.	SEE TABLE
TREAT. & FIN.	
NAME	SDL PCB-V CONNECTOR ASS'Y 20P MALE
PART NO.	⚠1 7322-8501 ETC.
DWG NO.	7322-8501:R
	YAZAKI CORPORATION

Confidential