ASM. P. NO.	① HOUSING		② TERMINAL	
YAZAKI NO.	MATERIAL	QUANTITY	MATERIAL	QUANTITY
⚠2 7322-8500	PBT (NATURAL)	1	BRASS TIN PLATING	10
7322-8500-30	PBT (BLACK)			
⚠3 7322-8500-50	PBT (ORANGE)			
⚠4 7322-8500-90	PBT (BLUE)			

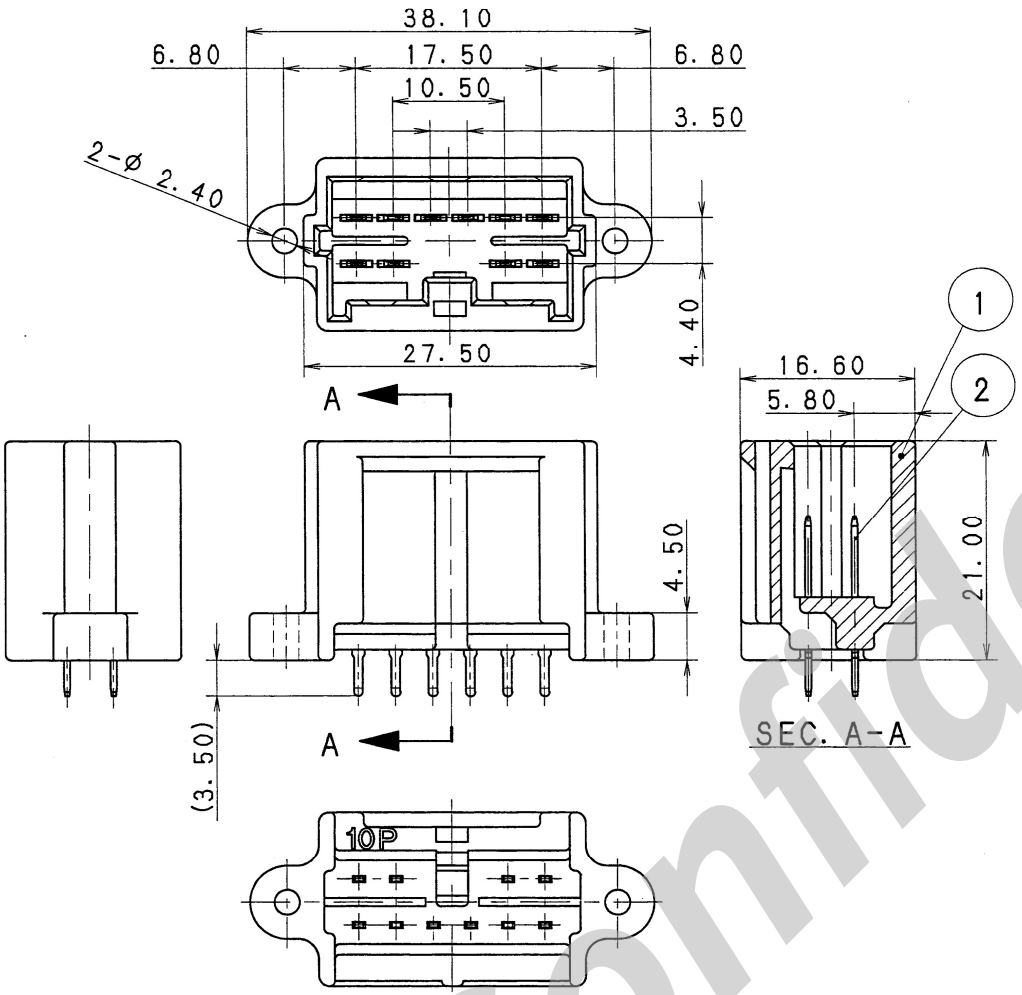

⚠1 注記

⚠2 1. 嵌合相手品番 ：7323-8307, 7323-8307-30

2. プリント基板固定用ネジ ： M3XL8ナベ2種（推奨サイズ）.

： M3XL8サラ1種（推奨サイズ）.

3. 締め付けトルクは39.2~49.0N·cm{4~5kgf·cm}とする.

⚠1 NOTES

⚠2 1. MATING PART NO. ：7323-8307, 7323-8307-30

2. FASTENING SCREW

： M3XL8 PAN HEAD SECOND CLASS (RECOMMEND)

： M3XL8 COUNTERSUNK HEAD FIRST CLASS (-DO-)

3. TIGHTENING TORQUE：39.2~49.0N·cm{4~5kgf·cm}

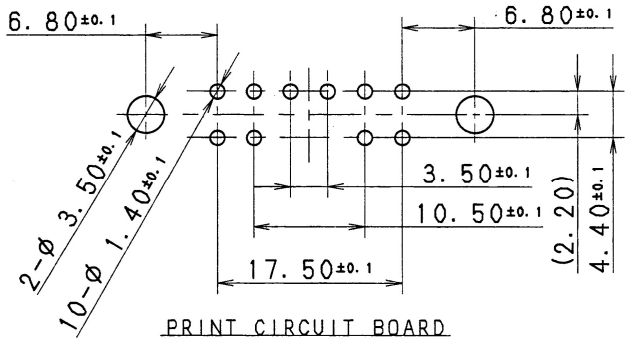

PRINT CIRCUIT BOARD

LET	DATE	REVISION RECORD	NO.	CHKD
⚠4	95.10.11	ADDED PART NO.	C95-6697	C.M
⚠3	94.06.15	ADDED PART NO.	C94-L854	C.M
⚠2	94.03.07	ADDED PART NO.	C94-L394	C.M
⚠1	92.07.09	ADDED NOTES	C92-L382	H.F
	92.04.06	NEW	C92-6286	K.S

GENERAL TOLERANCE

	10MAX	50MAX	100MAX	250MAX	250OVR	ANGLE	ECCENT
A	±0.15	±0.2	±0.3	±0.5	±0.75	±30′	0.1
B	±0.2	±0.3	±0.55	±0.95	±1.4	±30′	0.1
Ⓒ	±0.3	±0.5	±0.8	±1.4	±2	±30′	0.15

SPECIFIED

MASS g

CUSTOMER

CUSTOMER PART NO. | CUSTOMER DWG NO.

OFFICE | TRIAL PART NO. 088722-2155

VENDOR

VENDOR NO.

DWG TYPE	DWG SOURCE	DWG DATE	UNIT	SCL	ANGLE
R	NEW	92.04.06	mm	2/1	3

APPROVED	CHECKED	CHECKED	DESIGN	DRAWN
			T. MAKITA	増田
'95.10.16		'95.10.13	88.09.16	'95.10.11

MATL. SPEC. SEE TABLE | TREAT. & FIN.

NAME SDL PCB-V CONNECTOR ASS'Y 10P MALE

PART NO. CH. CODE ⚠2 7322-8500-30 ETC.

DWG NO. 7322-8500-30 :R

YAZAKI CORPORATION

ISSUE MARK

Confidential