| ASM. P. NO. | ① HOUSING | | ② TERMINAL | |
|---|---|---|---|---|
| YAZAKI NO. | MATERIAL | QUANTITY | MATERIAL | QUANTITY |
| 7322-8387-30 | PBT (BLACK) | 1 | BRASS<br>TIN PLATING | 18 |

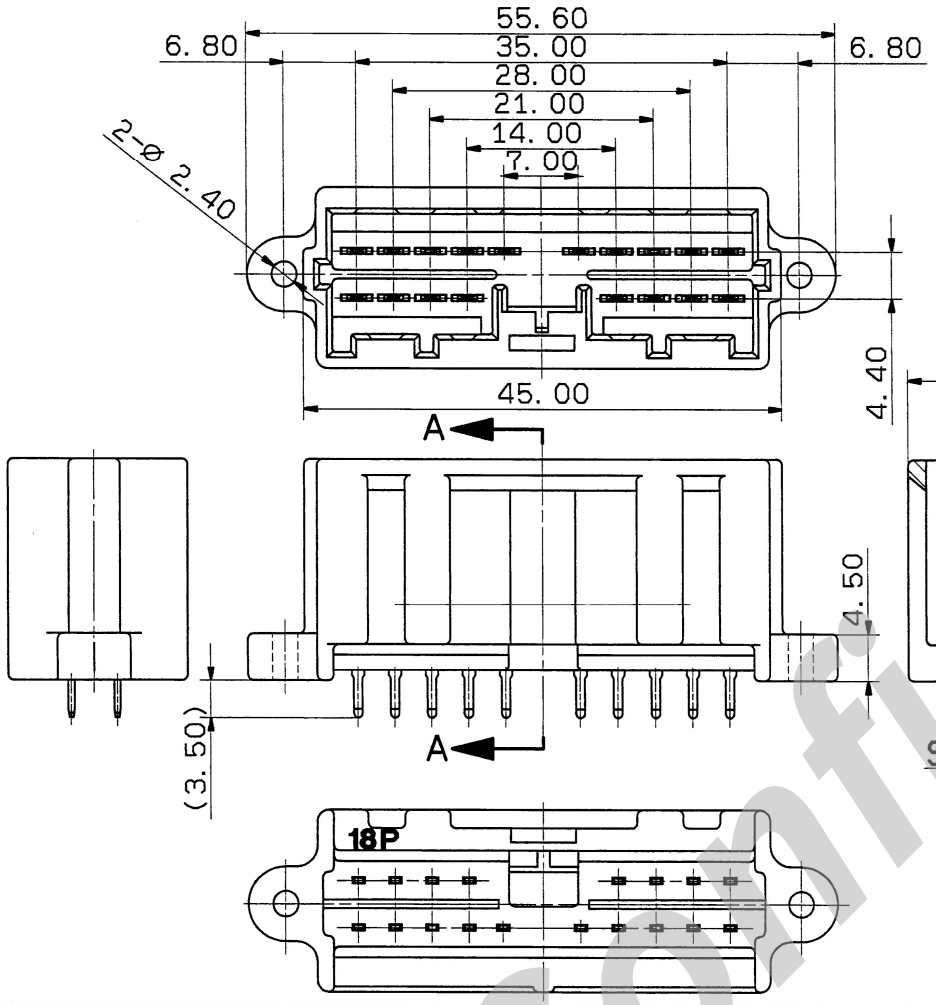


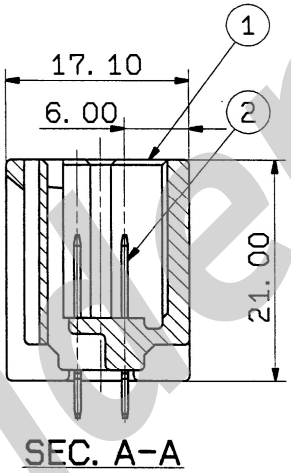


① 注記

1. 嵌合相手品番：7323-8385-30
2. プリント基板固定用ネジ ： M3XL8ナベ2種(推奨サイズ).
   ： M3XL8サラ1種(推奨サイズ).
3. 締め付けトルクは39.2~49.0N・cm{4~5kgf・cm}とする.

① NOTES

1. MATING PART NO. :7323-8385-30
2. FASTENING SCREW
   : M3XL8 PAN HEAD SECOND CLASS(RECOMMEND)
   : M3XL8 COUNTERSUNK HEAD FIRST CLASS(-DO-)
3. TIGHTENING TORQUE:39.2~49.0N・cm{4~5kgf・cm}

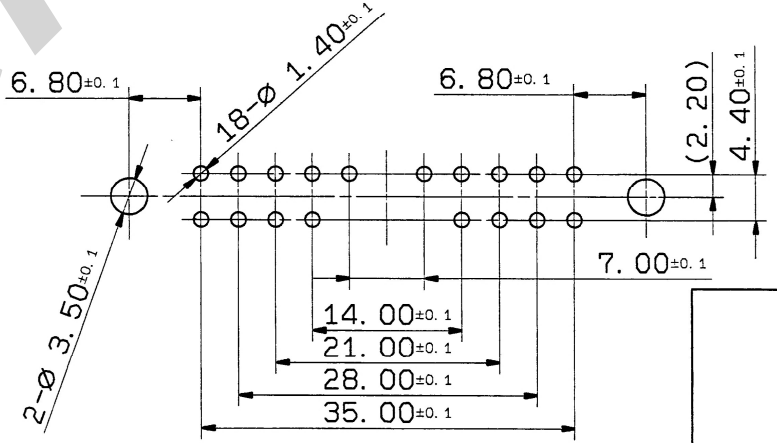


PRINT CIRCUIT BOARD

ISSUE MARK

| LET | DATE | REVISION RECORD | NO. | CHKD |
|---|---|---|---|---|
| ① | 92.07.09 | ADDED NOTES | C92-L386 | H.F |
| | 92.04.06 | NEW | C92-6291 | K.S |

GENERAL TOLERANCE

| | 10MAX | 50MAX | 100MAX | 250MAX | 250OVR | ANGLE | ECCENT |
|---|---|---|---|---|---|---|---|
| A | ±0.15 | ±0.2 | ±0.3 | ±0.5 | ±0.75 | ±30' | 0.1 |
| B | ±0.2 | ±0.3 | ±0.55 | ±0.95 | ±1.4 | ±30' | 0.1 |
| Ⓒ | ±0.3 | ±0.5 | ±0.8 | ±1.4 | ±2 | ±30' | 0.15 |

SPECIFIED

MASS g

| | |
|---|---|
| CUSTOMER | |
| CUSTOMER PART NO. | CUSTOMER DWG NO. |
| OFFICE | TRIAL PART NO. |
| VENDOR | 7V9122-8387 |
| VENDOR NO. | |

| DWG TYPE | DWG SOURCE | DWG DATE | UNIT | SCL | ANGLE |
|---|---|---|---|---|---|
| R | NEW | 92.04.06 | mm | 2/1 | 3 |

| APPROVED | CHECKED | CHECKED | DESIGN | DRAWN |
|---|---|---|---|---|
| 92.7.13 | 92.07.20 | 92.7.20 | SADAISHI 91.11.01 | ISHIZUKA 92.07.09 |

| | |
|---|---|
| MATL. SPEC. | SEE TABLE |
| TREAT. & FIN. | |
| NAME | SDL PCB-V CONNECTOR<br>ASS'Y 18P MALE |
| PART NO. | 7322-8387-30 |
| DWG NO. | 7322-8387-30:R |
| | YAZAKI CORPORATION |

Confidential