NO.	PART NO.	PART NAME	MATERIAL	QUANTITY
①	7122-6919	△2 NS-TYPE HOUSING 6PM	PBT (NATURAL)	1
②	7114-1537-02	NS-TYPE PCB TERMINAL A	△2 BRASS (t=0.64)	4
③	7114-1538-02	NS-TYPE PCB TERMINAL B	TIN PLATING	2

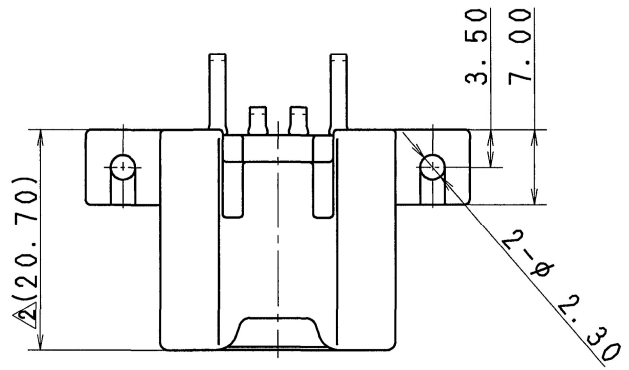

注 記

△2 1) 推奨タッピンねじ (JIS B1115, B1122) 及び締め付けトルク.

M3XL6 ナベ2種 29.4~39.2N·cm

M3XL8 ナベ2種 39.2~49.0N·cm

△1 2) かん合相手品番 : 7223-6818

NOTES

△2 1) RECOMMENDABLE FASTENING TAPPING SCREWS (JIS B1115, B1122) & TIGHTENING TORQUE:

M3XL6 PAN HEAD SECOND CLASS 29.4~39.2N·cm

M3XL8 PAN HEAD SECOND CLASS 39.2~49.0N·cm

△1 2) MATING PART NO. : 7223-6818

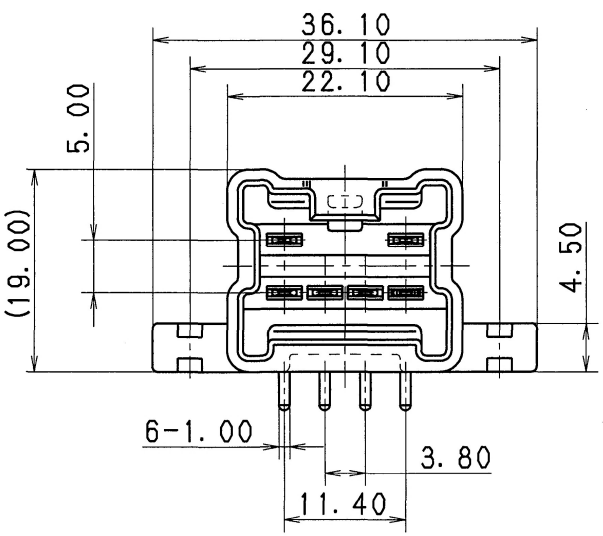

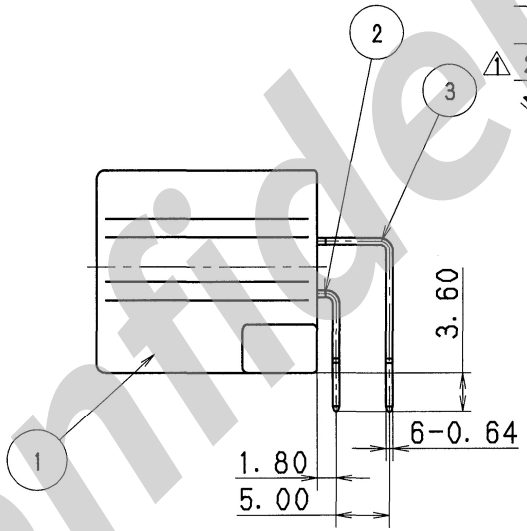

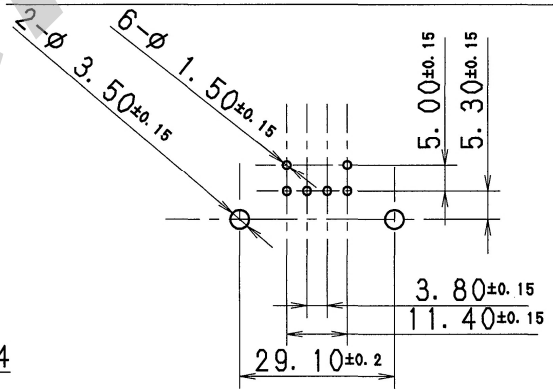

DIM. OF FIXED HOLE PRINT CIRCUIT BOARD. (1/1)
プリント基板取付け穴寸法 (1:1)

ISSUE MARK

△2	12.01.16	ADDED DIMENSION, ETC.	C12-Z118	J.C
△1	94.01.24	CORRECTION OF A CLERICAL ERROR	C94-P016	C.M
	93.11.10	NEW	C93-P187	C.M
LET	DATE	REVISION RECORD	NO.	CHKD

GENERAL TOLERANCE

	10MAX	50MAX	100MAX	250MAX	2500VR	ANGLE	ECCENT
A	±0.15	±0.2	±0.3	±0.5	±0.75	±30′	0.1
B	±0.2	±0.3	±0.55	±0.95	±1.4	±30′	0.1
Ⓒ	±0.3	±0.5	±0.8	±1.4	±2	±30′	0.15

SPECIFIED

MASS g

CUSTOMER

CUSTOMER PART NO. | CUSTOMER DWG NO.

OFFICE | TRIAL PART NO.

VENDOR

VENDOR NO.

DWG TYPE	DWG SOURCE	DWG DATE	UNIT	SCL	ANGLE
R	NEW	93.11.10	mm	2:1	3

APPROVED	CHECKED	CHECKED	DESIGN	DRAWN
M. KASHIYAMA	———	Y. FUKASE	SUGIYAMA 杉山	J. CARILLO
12.01.16	———	12.01.16	93.11.10	12.01.16

MATL. SPEC. SEE TABLE | TREAT. & FIN. SEE TABLE

NAME NS-TYPE CONNECTOR 6P MALE ASSEMBLY (PCB-H)

PART NO. / CH. CODE 7322-6919

DWG NO. 7322-6919:R | SET DWG NO.

YAZAKI CORPORATION

Confidential