© COPYRIGHT. THIS DRAWING HAS COPYRIGHT AND MAY NOT BE COPIED IN WHOLE OR IN PART OR USED FOR ANY PURPOSE OTHER THAN FOR WHICH IT IS SUPPLIED WITHOUT EXPRESS WRITTEN CONSENT OF YAZAKI EUROPE LIMITED.

UNSEALED TERMINAL

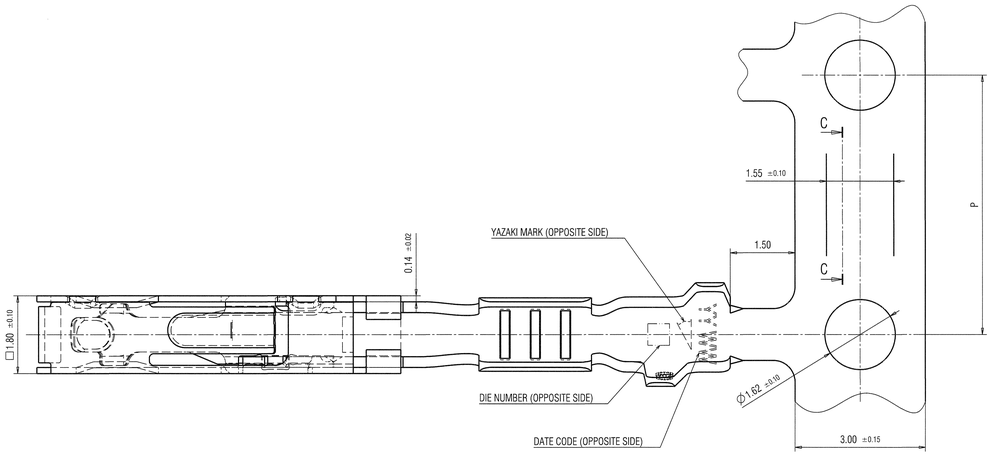

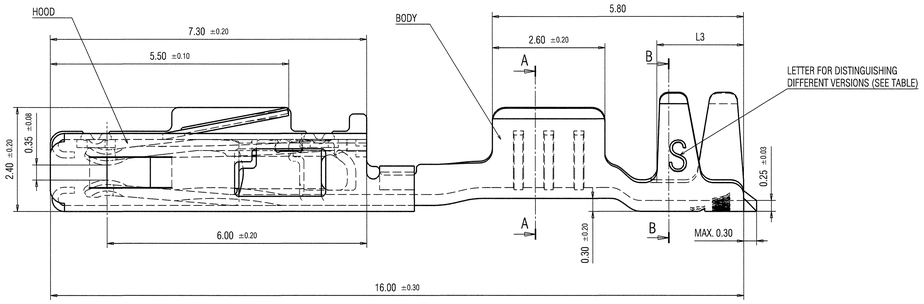

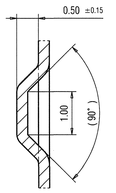

SECTION C-C

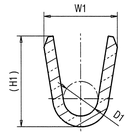

SECTION A-A

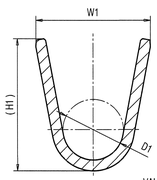

SECTION A-A

VALID FOR PART NO.:
7296-0020-02
7296-0020-06
7296-0020-08

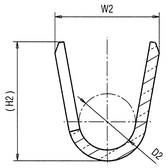

SECTION B-B

SEALED TERMINAL

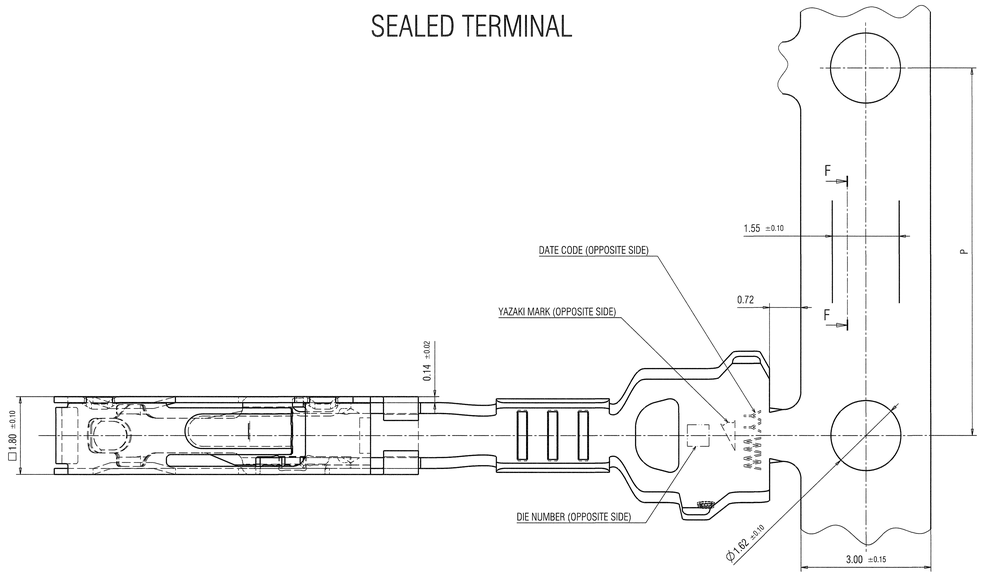

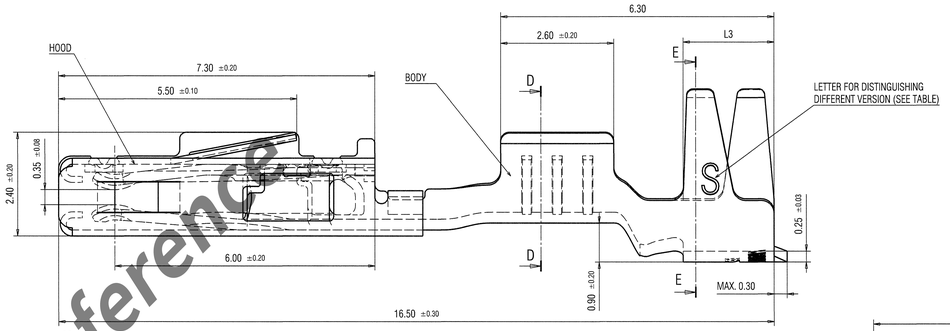

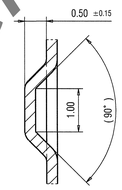

SECTION F-F

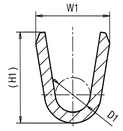

SECTION D-D

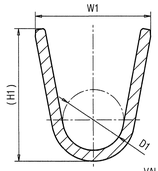

SECTION D-D

VALID FOR PART NO.:
7296-0021-02
7296-0021-06
7296-0021-08

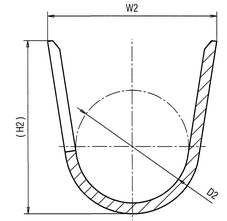

SECTION E-E

NOTES:

1. MATERIAL
   BODY: CuNiSi
   HOOD: X10CrNi 18-8;
2. APPLICABLE SEALS: SEE TABLE;
3. MATING PRODUCT ACCORDING DRAWING: T.B.D.;
4. FOR GENERAL GEOMETRICAL TOLERANCE SEE TABLE (ECCENT=ECCENTRICITY);
5. HANDLING MANUAL: YPES-15-1692E;
6. PRODUCT STANDARD: YPES-11-04-292E;
7. THE MATERIALS USED IN THIS PRODUCT ARE IN CONFORMITY WITH REQUIREMENTS OF EU ELV 2000/53/EC DIRECTIVE AND ASSOCIATED DOCUMENTS

	SUBASSY NO.	WIRE RANGE [mm²]	PLATING	LETTER	W1	H1	D1	W2	H2	D2	L3	P	MASS [g]	SUITABLE SINGLE-WIRE-SEALS
UNSEALED	7216-7626-02	0.35	TIN PLATING HOT DIPPED 1-3 μm	S	1.70	2.10	0.80±0.20	2.40	2.75	1.30±0.20	2.00	6.00±0.10	0.161	N/A
	7216-7626-06		SELECTIVE SILVER PLATING 1-2 μm ON CONTACT AREA	L										
	7216-7626-08		SELECTIVE GOLD PLATING MIN. 0.8 μm ON CONTACT AREA	A										
	7216-7627-02	0.50 - 0.75	TIN PLATING HOT DIPPED 1-3 μm	S	2.20	2.55	1.15±0.20	3.10	3.60	1.80±0.20	2.20	6.00±0.10	0.178	
	7216-7627-06		SELECTIVE SILVER PLATING 1-2 μm ON CONTACT AREA	L										
	7216-7627-08		SELECTIVE GOLD PLATING MIN. 0.8 μm ON CONTACT AREA	A										
	7296-0020-02	1.00	TIN PLATING HOT DIPPED 1-3 μm	S	2.65	3.05	1.40±0.20	3.40	3.75	2.10±0.20	2.20	8.50±0.10	0.189	
	7296-0020-06		SELECTIVE SILVER PLATING 1-2 μm ON CONTACT AREA	L										
	7296-0020-08		SELECTIVE GOLD PLATING MIN. 0.8 μm ON CONTACT AREA	A										
	7216-7628-02	1.50	TIN PLATING HOT DIPPED 1-3 μm	S	2.70	3.25	1.40±0.20	3.50	4.00	2.10±0.20	2.20	8.50±0.10	0.192	
	7216-7628-06		SELECTIVE SILVER PLATING 1-2 μm ON CONTACT AREA	L										
	7216-7628-08		SELECTIVE GOLD PLATING MIN. 0.8 μm ON CONTACT AREA	A										
SEALED	7216-7632-02	0.35	TIN PLATING HOT DIPPED 1-3 μm	S	1.70	2.10	0.80±0.20	3.90	4.00	2.60±0.20	2.10	8.50±0.10	0.178	FOR 3.55mm CAVITY: 7172-5568-70 FOR 4.00mm CAVITY WIRE SEALS, PLEASE CONTACT OUR TECHNICAL SUPPORT
	7216-7632-06		SELECTIVE SILVER PLATING 1-2 μm ON CONTACT AREA	L										
	7216-7632-08		SELECTIVE GOLD PLATING MIN. 0.8 μm ON CONTACT AREA	A										
	7216-7633-02	0.50 - 0.75	TIN PLATING HOT DIPPED 1-3 μm	S	2.20	2.50	1.15±0.20	3.90	4.00	2.60±0.20	2.10	8.50±0.10	0.187	FOR 3.55mm CAVITY: 7172-5570-60 FOR 4.00mm CAVITY WIRE SEALS, PLEASE CONTACT OUR TECHNICAL SUPPORT
	7216-7633-06		SELECTIVE SILVER PLATING 1-2 μm ON CONTACT AREA	L										
	7216-7633-08		SELECTIVE GOLD PLATING MIN. 0.8 μm ON CONTACT AREA	A										
	7296-0021-02	1.00	TIN PLATING HOT DIPPED 1-3 μm	S	2.65	3.05	1.40±0.20	4.05	4.55	2.60±0.20	2.10	8.50±0.10	0.197	
	7296-0021-06		SELECTIVE SILVER PLATING 1-2 μm ON CONTACT AREA	L										
	7296-0021-08		SELECTIVE GOLD PLATING MIN. 0.8 μm ON CONTACT AREA	A										
	7216-7634-02	1.50	TIN PLATING HOT DIPPED 1-3 μm	S	2.70	3.25	1.40±0.20	4.20	5.05	2.60±0.20	2.10	8.50±0.10	0.199	
	7216-7634-06		SELECTIVE SILVER PLATING 1-2 μm ON CONTACT AREA	L										
	7216-7634-08		SELECTIVE GOLD PLATING MIN. 0.8 μm ON CONTACT AREA	A										

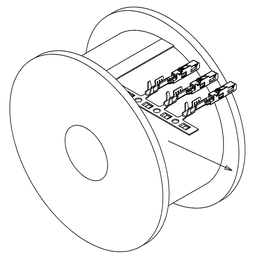

FEED DIRECTION
(SCALE 2:1)

ISOMETRIC VIEW
(SCALE 1:1)

LET	DATE	REVISION RECORD	NO.	CHKD
–	24.03.2017.	NEW	Y17-0279	I.J.

PRINTED COPIES ARE UNCONTROLLED. THEY ARE POTENTIALLY OUT-OF-DATE AND INVALID. DATABASE IS MASTER.

GENERAL TOLERANCE							
	10MAX	50MAX	100MAX	250MAX	250OVR	ANGLE	ECCENT
A	±0.15	±0.2	±0.3	±0.5	±0.75	±30'	0.1
B	±0.2	±0.3	±0.55	±0.95	±1.4	±30'	0.1
C	±0.3	±0.5	±0.8	±1.4	±2	±30'	0.15
SPECIFIED						MASS	SEE TABLE

DWG TYPE	DWG SOURCE	DWG DATE	UNIT	SCL	ANGLE
R	NEW	09.03.2017.	mm	20/1	3

APPROVED	CHECKED	CHECKED	DESIGN	DRAWN
G.GREGURIC	I.JAKOPLIC	A.BUCEVIC	M.SPRLJAN	H.JAKLENEC
24.03.2017.	24.03.2017.	13.07.2012.	24.03.2017.	

CUSTOMER
CUSTOMER PART NO. | CUSTOMER DWG NO.
OFFICE YEL-K | TRIAL PART NO.
VENDOR
VENDOR NO.

MATL. SPEC: SEE NOTES | TREAT. & FIN.: SEE TABLE

NAME: 1.2 mm CONTACT SYSTEM (YMT)
FEMALE TERMINAL SEALED/UNSEALED

PART NO. 7216-7626-02, ETC.
CH. CODE

DWG NO. 7216-7626-02:R | SET DWG NO.

ISSUE MARK

YAZAKI

A0

Reference