© COPYRIGHT. THIS DRAWING HAS COPYRIGHT AND MAY NOT BE COPIED IN WHOLE OR IN PART OR USED FOR ANY PURPOSE OTHER THAN FOR WHICH IT IS SUPPLIED WITHOUT EXPRESS WRITTEN CONSENT OF YAZAKI EUROPE LIMITED.

CODE OVERVIEW

CODE A (SCALE 2:1)	CODE B (SCALE 2:1)	CODE C (SCALE 2:1)	CODE D (SCALE 2:1)	CODE 0 (SCALE 2:1)
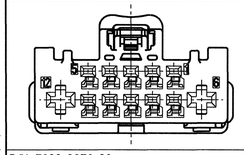	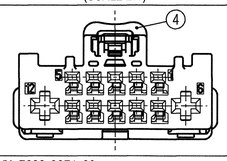	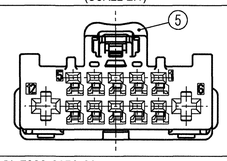	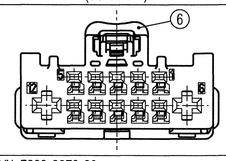	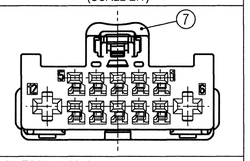
P/N: 7289-9370-30 COLOR: BLACK (SIMILAR TO RAL 9005) 12P 2x2.8+10x1.2 NWP HYBRID SYSTEM CONNECTOR (F) SUBASSEMBLY CODE A	P/N: 7289-9371-60 COLOR: GREEN (SIMILAR TO RAL 6002) 12P 2x2.8+10x1.2 NWP HYBRID SYSTEM CONNECTOR (F) SUBASSEMBLY CODE B	P/N: 7289-9372-90 COLOR: BLUE (SIMILAR TO RAL 5005) 12P 2x2.8+10x1.2 NWP HYBRID SYSTEM CONNECTOR (F) SUBASSEMBLY CODE C	P/N: 7289-9373-80 COLOR: BROWN (SIMILAR TO RAL 8011) 12P 2x2.8+10x1.2 NWP HYBRID SYSTEM CONNECTOR (F) SUBASSEMBLY CODE D	P/N: 7289-9369-20 COLOR: PURPLE (SIMILAR TO RAL 4006) 12P 2x2.8+10x1.2 NWP HYBRID SYSTEM CONNECTOR (F) SUBASSEMBLY CODE 0

YAZAKI SUBASSY PART NO.	NAME	NO.	YAZAKI PART NO.	NAME	MATERIAL	COLOR	QTY.
7289-9370-30	12P 2x2.8+10x1.2 NWP HYBRID SYSTEM CONNECTOR (F) SUBASSEMBLY CODE A	①	7189-9370-30	12P 2x2.8+10x1.2 NWP HYBRID SYSTEM (F) HOUSING CODE A	PBT-(GF+MD)17	BLACK	1
		②	7172-1507	12P 2x2.8+10x1.2 NWP HYBRID SYSTEM (F) SIDE SPACER	PBT-GF30	NATURAL	1
		③	7172-1390-50	1.2 NWP SYSTEM CPA	PBT-GF30	ORANGE	1
7289-9371-60	12P 2x2.8+10x1.2 NWP HYBRID SYSTEM CONNECTOR (F) SUBASSEMBLY CODE B	④	7189-9371-60	12P 2x2.8+10x1.2 NWP HYBRID SYSTEM (F) HOUSING CODE B	PBT-(GF+MD)17	GREEN	1
		②	7172-1507	12P 2x2.8+10x1.2 NWP HYBRID SYSTEM (F) SIDE SPACER	PBT-GF30	NATURAL	1
		③	7172-1390-50	1.2 NWP SYSTEM CPA	PBT-GF30	ORANGE	1
7289-9372-90	12P 2x2.8+10x1.2 NWP HYBRID SYSTEM CONNECTOR (F) SUBASSEMBLY CODE C	⑤	7189-9372-90	12P 2x2.8+10x1.2 NWP HYBRID SYSTEM (F) HOUSING CODE C	PBT-(GF+MD)17	BLUE	1
		②	7172-1507	12P 2x2.8+10x1.2 NWP HYBRID SYSTEM (F) SIDE SPACER	PBT-GF30	NATURAL	1
		③	7172-1390-50	1.2 NWP SYSTEM CPA	PBT-GF30	ORANGE	1
7289-9373-80	12P 2x2.8+10x1.2 NWP HYBRID SYSTEM CONNECTOR (F) SUBASSEMBLY CODE D	⑥	7189-9373-80	12P 2x2.8+10x1.2 NWP HYBRID SYSTEM (F) HOUSING CODE D	PBT-(GF+MD)17	BROWN	1
		②	7172-1507	12P 2x2.8+10x1.2 NWP HYBRID SYSTEM (F) SIDE SPACER	PBT-GF30	NATURAL	1
		③	7172-1390-50	1.2 NWP SYSTEM CPA	PBT-GF30	ORANGE	1
7289-9369-20	12P 2x2.8+10x1.2 NWP HYBRID SYSTEM CONNECTOR (F) SUBASSEMBLY CODE 0	⑦	7189-9369-20	12P 2x2.8+10x1.2 NWP HYBRID SYSTEM (F) HOUSING CODE 0	PBT-(GF+MD)17	PURPLE	1
		②	7172-1507	12P 2x2.8+10x1.2 NWP HYBRID SYSTEM (F) SIDE SPACER	PBT-GF30	NATURAL	1
		③	7172-1390-50	1.2 NWP SYSTEM CPA	PBT-GF30	ORANGE	1

NOTES:
1. MATERIAL: SEE TABLE;
2. COLOR: SEE CODE OVERVIEW;
3. APPLICABLE TERMINALS: 1.2 CB SYS F COMPATIBLE;
   2.8 F SYS. : 7216-7656-02, 7216-7657-02, 7216-7655-02, 7296-0563-02;
4. THIS DIMENSION SHOWS THE PRESET POSITION OF SIDE SPACER ON THE SUBASSEMBLY;
5. THIS DIMENSION SHOWS THE PRESET POSITION OF CPA ON THE SUBASSEMBLY;
6. MATING PRODUCT: 7288-9365-30 ETC;
7. FOR GENERAL DIMENSIONAL AND POSITIONAL TOLERANCES SEE GENERAL TOLERANCE TABLE;
8. HANDLING MANUAL: YPES-15-1664E;
9. PRODUCT STANDARD: TBD.;
10. THE MATERIALS USED IN THIS PRODUCT ARE IN CONFORMITY WITH REQUIREMENTS OF EU ELV 2000/53/EC DIRECTIVE AND ASSOCIATED DOCUMENTS;

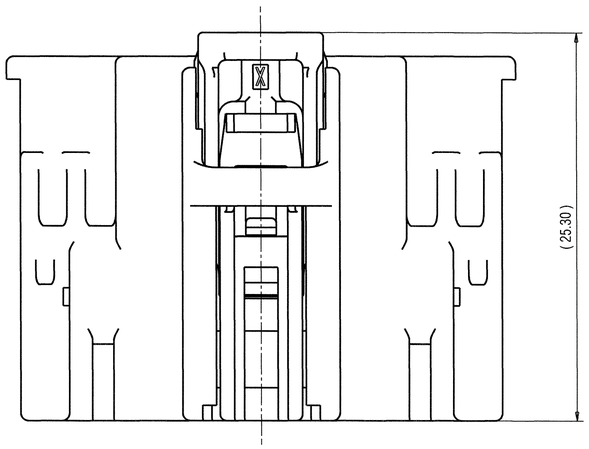

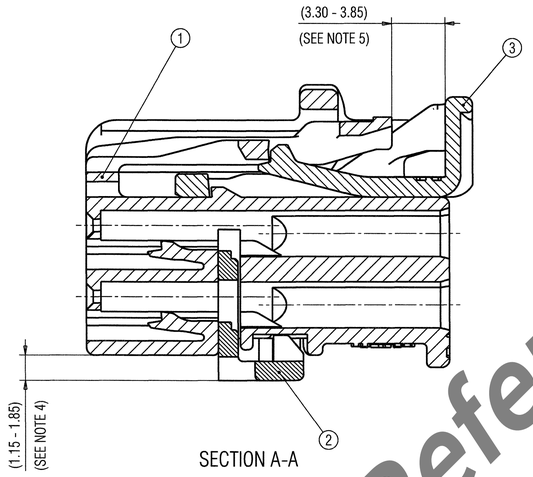

SECTION A-A

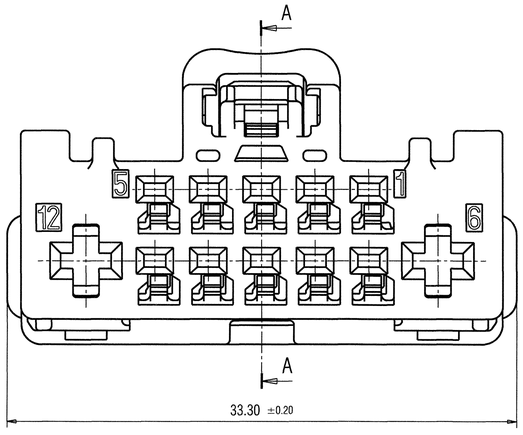

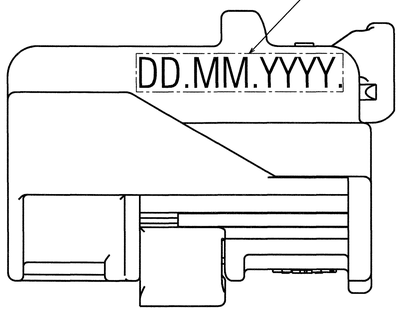

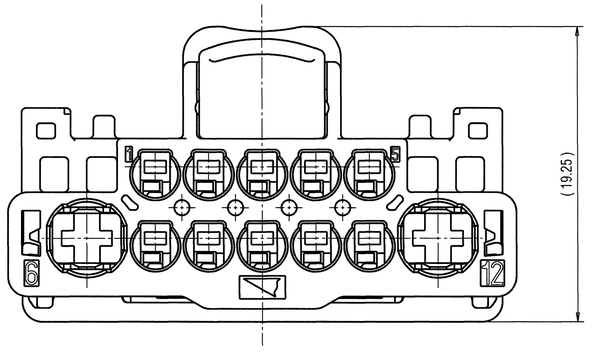

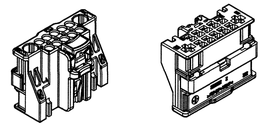

ISOMETRIC VIEW
(SCALE 1:1)

Reference

-	22.05.2018.	NEW	Y18-0441	B.F.
LET	DATE	REVISION RECORD	NO.	CHKD

PRINTED COPIES ARE UNCONTROLLED. THEY ARE POTENTIALLY OUT-OF-DATE AND INVALID. DATABASE IS MASTER.

GENERAL TOLERANCE	10MAX	50MAX	100MAX	250MAX	2500VR	ANGLE	ECCENT
A	±0.15	±0.2	±0.3	±0.5	±0.75	±30'	0.1
B	±0.2	±0.3	±0.55	±0.95	±1.4	±30'	0.1
©	±0.3	±0.5	±0.8	±1.4	±2	±30'	0.15
SPECIFIED						MASS	6.81 g

CUSTOMER									
CUSTOMER PART NO.		CUSTOMER DWG NO.							
OFFICE YEL-P		TRIAL PART NO.							
VENDOR		X41583-E206							
VENDOR NO.									
DWG TYPE	DWG SOURCE	DWG DATE	UNIT	SCL	ANGLE				
R	NEW	22.05.2018.	mm	5:1	3				
APPROVED	CHECKED	CHECKED	DESIGN	DRAWN					
G. GREGURIC	B. FRETZE	T.GREBENAR	M.ZOKALJ	K.SAFARIC					
28.5.2018.	25.05.2018.	23.05.2018.	31.03.2017.	22.05.2018.					

MATL. SPEC.	SEE NOTES
TREAT. & FIN.	-
NAME	12P 2x2.8+10x1.2 NWP HYBRID SYSTEM CONNECTOR (F) SUBASSEMBLY
PART NO. / CH. CODE	7289-9370-30 ETC.
DWG NO.	7289-9370-30:R
SET DWG NO.	
ISSUE MARK	

YAZAKI

A1