© COPYRIGHT. THIS DRAWING HAS COPYRIGHT AND MAY NOT BE COPIED IN WHOLE OR IN PART OR USED FOR ANY PURPOSE OTHER THAN FOR WHICH IT IS SUPPLIED WITHOUT EXPRESS WRITTEN CONSENT OF YAZAKI EUROPE LIMITED.

CODE OVERVIEW

CODE A (SCALE 2:1)	CODE B (SCALE 2:1)	CODE C (SCALE 2:1)	CODE D (SCALE 2:1)	CODE 0 (SCALE 2:1)
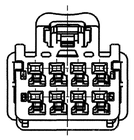	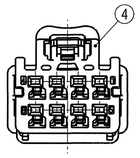	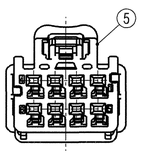	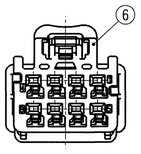	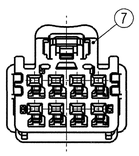
P/N: 7289-7785-30 COLOR: BLACK (SIMILAR TO RAL 9005) 8P 1.2 NWP SYSTEM CONNECTOR F SUBASSEMBLY CODE A	P/N: 7289-7786-60 COLOR: GREEN (SIMILAR TO RAL 6002) 8P 1.2 NWP SYSTEM CONNECTOR F SUBASSEMBLY CODE B	P/N: 7289-7787-90 COLOR: BLUE (SIMILAR TO RAL 5005) 8P 1.2 NWP SYSTEM CONNECTOR F SUBBASSEMBLY CODE C	P/N: 7289-7788-80 COLOR: BROWN (SIMILAR TO RAL 8011) 8P 1.2 NWP SYSTEM CONNECTOR F SUBASSEMBLY CODE D	P/N: 7289-7784-20 COLOR: PURPLE (SIMILAR TO RAL 4006) 8P 1.2 NWP SYSTEM CONNECTOR F SUBASSEMBLY CODE 0

YAZAKI SUBASSY PART NO.	NAME	NO.	YAZAKI PART NO.	NAME	MATERIAL	COLOR	QTY.
7289-7785-30	8P 1.2 NWP SYSTEM CONNECTOR FEMALE SUBASSEMBLY CODE A	①	7189-7785-30	8P 1.2 NWP SYSTEM F HOUSING CODE A	PBT-(GF+MD)17	BLACK	1
		②	7172-1393	8P 1.2 NWP SYSTEM M/F SIDE SPACER	PBT-GF30	NATURAL	1
		③	7172-1390	1.2 NWP SYSTEM CPA	PBT-GF30	ORANGE	1
7289-7786-60	8P 1.2 NWP SYSTEM CONNECTOR FEMALE SUBASSEMBLY CODE B	④	7189-7786-60	8P 1.2 NWP SYSTEM F HOUSING CODE B	PBT-(GF+MD)17	GREEN	1
		②	7172-1393	8P 1.2 NWP SYSTEM M/F SIDE SPACER	PBT-GF30	NATURAL	1
		③	7172-1390	1.2 NWP SYSTEM CPA	PBT-GF30	ORANGE	1
7289-7787-90	8P 1.2 NWP SYSTEM CONNECTOR FEMALE SUBASSEMBLY CODE C	⑤	7189-7787-90	8P 1.2 NWP SYSTEM F HOUSING CODE C	PBT-(GF+MD)17	BLUE	1
		②	7172-1393	8P 1.2 NWP SYSTEM M/F SIDE SPACER	PBT-GF30	NATURAL	1
		③	7172-1390	1.2 NWP SYSTEM CPA	PBT-GF30	ORANGE	1
7289-7788-80	8P 1.2 NWP SYSTEM CONNECTOR FEMALE SUBASSEMBLY CODE D	⑥	7189-7788-80	8P 1.2 NWP SYSTEM F HOUSING CODE D	PBT-(GF+MD)17	BROWN	1
		②	7172-1393	8P 1.2 NWP SYSTEM M/F SIDE SPACER	PBT-GF30	NATURAL	1
		③	7172-1390	1.2 NWP SYSTEM CPA	PBT-GF30	ORANGE	1
7289-7784-20	8P 1.2 NWP SYSTEM CONNECTOR FEMALE SUBASSEMBLY CODE 0	⑦	7189-7784-20	8P 1.2 NWP SYSTEM F HOUSING CODE 0	PBT-(GF+MD)17	PURPLE	1
		②	7172-1393	8P 1.2 NWP SYSTEM M/F SIDE SPACER	PBT-GF30	NATURAL	1
		③	7172-1390	1.2 NWP SYSTEM CPA	PBT-GF30	ORANGE	1

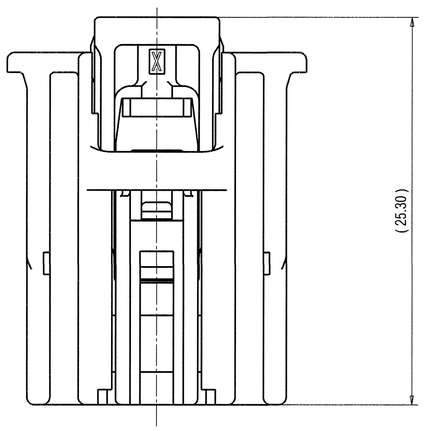

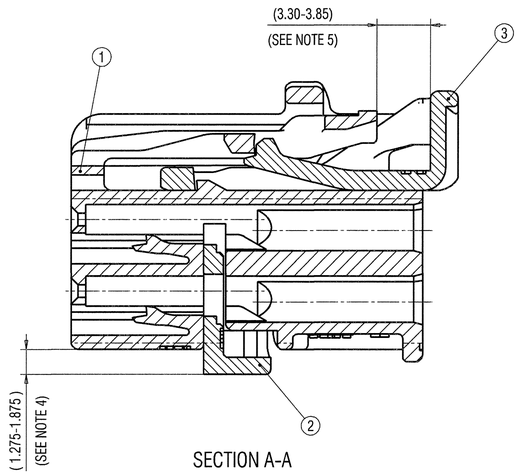

SECTION A-A

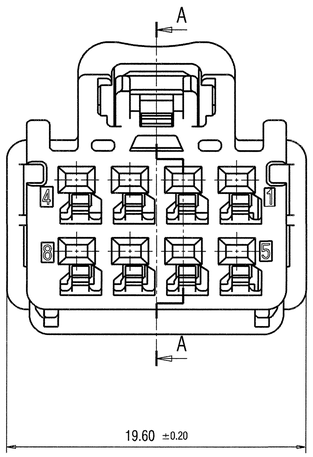

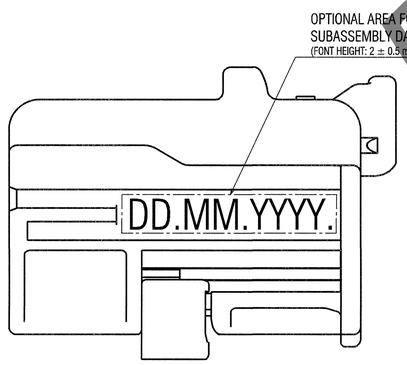

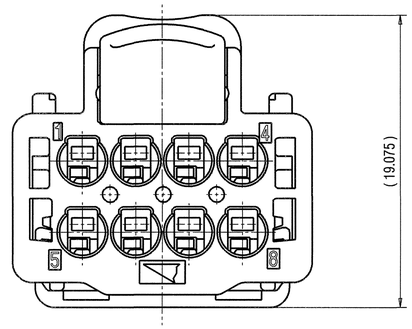

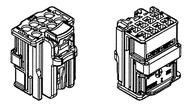

ISOMETRIC VIEW
(SCALE 1:1)

NOTES:
1. MATERIAL: SEE TABLE;
2. COLOR: SEE CODE OVERVIEW;
3. APPLICABLE TERMINALS: 1.2 CB SYSTEM F COMPATIBLE;
4. THIS DIMENSION SHOWS THE PRESET POSITION OF SIDE SPACER ON THE SUBASSEMBLY;
5. THIS DIMENSION SHOWS THE PRESET POSITION OF CPA ON THE SUBASSEMBLY;
6. MATING PRODUCT: 7288-7797-30 ETC.;
7. FOR GENERAL GEOMETRICAL TOLERANCE SEE TABLE (ECCENT=ECCENTRICITY);
8. HANDLING MANUAL: YPES-15-1664E;
9. PRODUCT STANDARD: TBD.;
10. THE MATERIALS USED IN THIS PRODUCT ARE IN CONFORMITY WITH REQUIREMENTS OF EU ELV 2000/53/EC DIRECTIVE AND ASSOCIATED DOCUMENTS;

Reference

LET	DATE	REVISION RECORD	NO.	CHKD
-	05.07.2016.	NEW	Y16-0438	B.F.

PRINTED COPIES ARE UNCONTROLLED. THEY ARE POTENTIALLY OUT-OF-DATE AND INVALID. DATABASE IS MASTER.

GENERAL TOLERANCE	10MAX	50MAX	100MAX	250MAX	2500VR	ANGLE	ECCENT
A	±0.15	±0.2	±0.3	±0.5	±0.75	±30'	0.1
B	±0.2	±0.3	±0.55	±0.95	±1.4	±30'	0.1
©	±0.3	±0.5	±0.8	±1.4	±2	±30'	0.15
SPECIFIED						MASS	4.3 g

DWG TYPE	DWG SOURCE	DWG DATE	UNIT	SCL	ANGLE
R	NEW	05.07.2016.	mm	5/1	3

APPROVED	CHECKED	CHECKED	DESIGN	DRAWN
G. GREGURIC	B. FREIZE	T. GREBENAR	T.COTA	D.MIHALINEC
12.07.2016.	12.07.2016.	08.07.2016.	07.07.2015.	05.07.2016.

CUSTOMER
CUSTOMER PART NO. — CUSTOMER DWG NO.
OFFICE YEL-P — TRIAL PART NO. X41583-E035
VENDOR
VENDOR NO.

MATL. SPEC. SEE NOTES — TREAT. & FIN. -
NAME 8P 1.2 NWP SYSTEM CONNECTOR (F) SUBASSEMBLY
PART NO. 7289-7785-30 ETC.
CH. CODE
DWG NO. 7289-7785-30:R — SET DWG NO.

ISSUE MARK

YAZAKI — A1