YAZAKI SUB ASS'Y NO.	NO.	YAZAKI PART NO.	MATERIAL	COLOR	QTY.
7283-8780-30, A	1	7183-8780-30, A	PBT	BLACK	1
	2	7137-2616-80	SILICONE RUBBER	RED-IRON	1

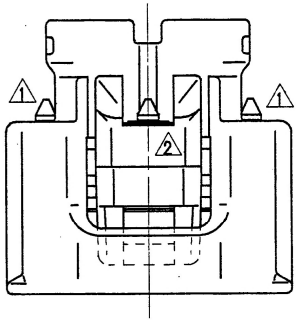

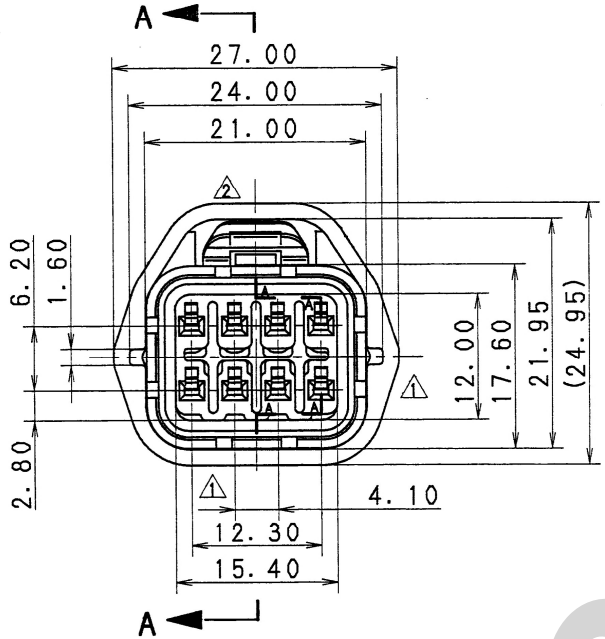

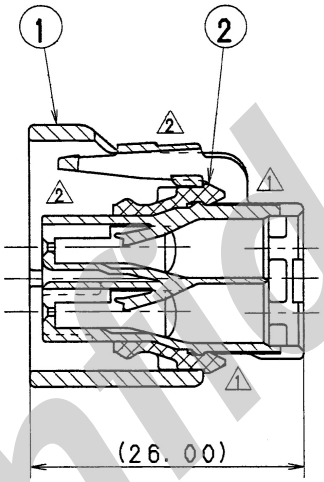

SEC. A-A

NOTES

2 1) APPLICABLE TERMINAL NO. :7116-1680-02, 7116-1680-08

2) APPLICABLE SEAL RUBBER NO. :7157-3950-80, 7157-3951-60

3 1 3) APPLICABLE PLUGGING RUBBER STOPPER NO. :7157-3952-80

4) APPLICABLE REAR HOLDER NO. :7157-4606-80

5) MATING PART NO. :7182-8780-30

注 記

2 1) 適用ターミナル品番：7116-1680-02, 7116-1680-08

2) 適用ゴム栓品番：7157-3950-80, 7157-3951-60

3 1 3) 適用プラグ栓品番：7157-3952-80

4) 適用リヤホルダ品番：7157-4606-80

5) 嵌合相手品番：7182-8780-30

ISSUE MARK

LET	DATE	REVISION RECORD	NO.	CHKD
3	95.07.11	CHANGED NOTES	C95-M048	A.H
2	95.02.23	CHANGED FORM, A	C95-L260	K.S
1	92.03.02	CHANGED FORM	C92-L138	I.K
	91.02.08	NEW	C91-L162	M.S

GENERAL TOLERANCE

	10MAX	50MAX	100MAX	250MAX	2500VR	ANGLE	ECCENT
A	±0.15	±0.2	±0.3	±0.5	±0.75	±30'	0.1
B	±0.2	±0.3	±0.55	±0.95	±1.4	±30'	0.1
C	±0.3	±0.5	±0.8	±1.4	±2	±30'	0.15

SPECIFIED

MASS g

CUSTOMER

CUSTOMER PART NO. | CUSTOMER DWG NO.

OFFICE | TRIAL PART NO.

VENDOR

VENDOR NO.

DWG TYPE	DWG SOURCE	DWG DATE	UNIT	SCL	ANGLE
R	NEW	91.02.08	mm	2/1	3

APPROVED	CHECKED	CHECKED	DESIGN	DRAWN
95.07.18	95.07.14	95.07.14	KANEKO 89.11.01	K. SUZUKI 95.07.11

MATL. SPEC. SEE TABLE

TREAT. & FIN.

NAME 2 SSD CONNECTOR HOUSING 8P FEMALE SUB ASS'Y

PART NO. CH. CODE 7283-8780-30, A

DWG NO. 7283-8780-30:R

YAZAKI CORPORATION

Confidential