YAZAKI SUB ASS'Y NO.	NO.	YAZAKI PART NO.	MATERIAL	COLOR	QTY.
7283-8760-30, A	1	7183-8760-30, A	PBT	BLACK	1
	2	7137-2615-80	SILICONE RUBBER	RED-IRON	1

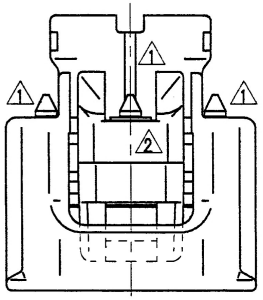

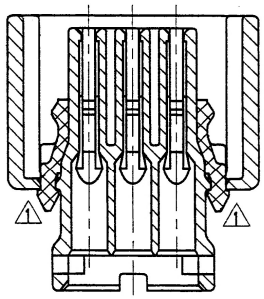

SEC. B-B

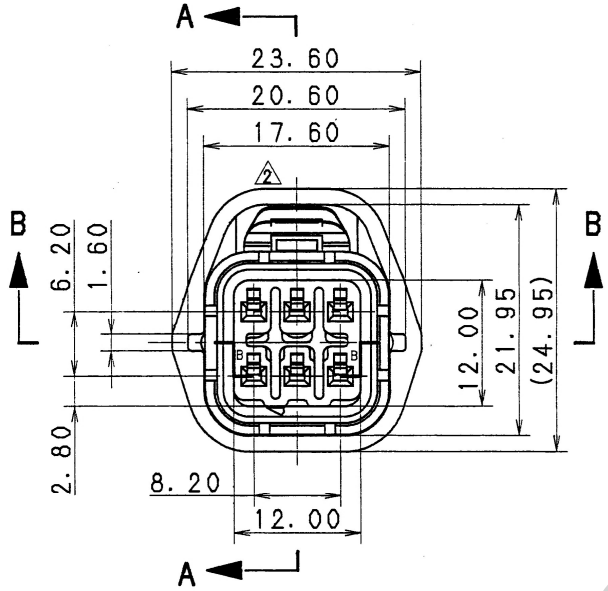

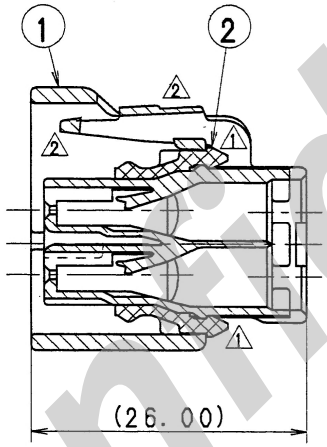

SEC. A-A

NOTES

1. APPLICABLE TERMINAL NO. :7116-1680-02, 7116-1680-08
2. APPLICABLE REAR HOLDER NO. :7157-4605-80
3. MATING PART NO. :7182-8760-30
4. APPLICABLE SEAL RUBBER NO. :7157-3950-80, 7157-3951-60
5. APPLICABLE PLUGGING RUBBER STOPPER NO. :7157-3952-80

注 記

1. 適用ターミナル品番:7116-1680-02, 7116-1680-08
2. 適用リヤホルダ品番:7157-4605-80
3. 嵌合相手品番:7182-8760-30
4. 適用ゴム栓品番:7157-3950-80, 7157-3951-60
5. 適用プラグ栓品番:7157-3952-80

ISSUE MARK

LET	DATE	REVISION RECORD	NO.	CHKD
3	95.07.11	CHANGED NOTES	C95-M047	A.H
2	95.03.03	CHANGED FORM, A	C95-L389	K.S
1	92.03.02	CHANGED FORM	C92-L138	I.K
	90.09.25	NEW	C90-L993	S.I

GENERAL TOLERANCE

	10MAX	50MAX	100MAX	250MAX	2500VR	ANGLE	ECCENT
A	±0.15	±0.2	±0.3	±0.5	±0.75	±30'	0.1
B	±0.2	±0.3	±0.55	±0.95	±1.4	±30'	0.1
C	±0.3	±0.5	±0.8	±1.4	±2	±30'	0.15

SPECIFIED

MASS g

CUSTOMER

CUSTOMER PART NO.

CUSTOMER DWG NO.

OFFICE

TRIAL PART NO.

VENDOR

VENDOR NO.

DWG TYPE	DWG SOURCE	DWG DATE	UNIT	SCL	ANGLE
R	NEW	90.09.25	mm	2 2/1	3

APPROVED	CHECKED	CHECKED	DESIGN	DRAWN
手塚	石塚	鰐島	OHTAKA	K. SUZUKI 鈴田
95.07.18	95.07.14	95.07.14	89.11.01	95.07.11

MATL. SPEC. SEE TABLE

TREAT. & FIN.

NAME 2 SSD CONNECTOR HOUSING

6P FEMALE SUB ASS'Y

PART NO. CH. CODE 7283-8760-30, A

DWG NO. 7283-8760-30:R

YAZAKI CORPORATION

Confidential