SUB ASSEMBLY PART NO. AND CH. CODE	NO.	PART NO. AND CH. CODE	MATERIAL	COLOR	QTY.
7283-8660, B (7C83-8660, B)	1	7183-8660 △2 (7B83-8660)	PBT	NATURAL	1
	2	△1 7157-6775 △2 (7B57-6775)	PBT	NATURAL	1
△4 7283-8660-30	1	△4 7183-8660-30	PBT	BLACK	1
	2	△4 7157-6775-30	PBT	BLACK	1

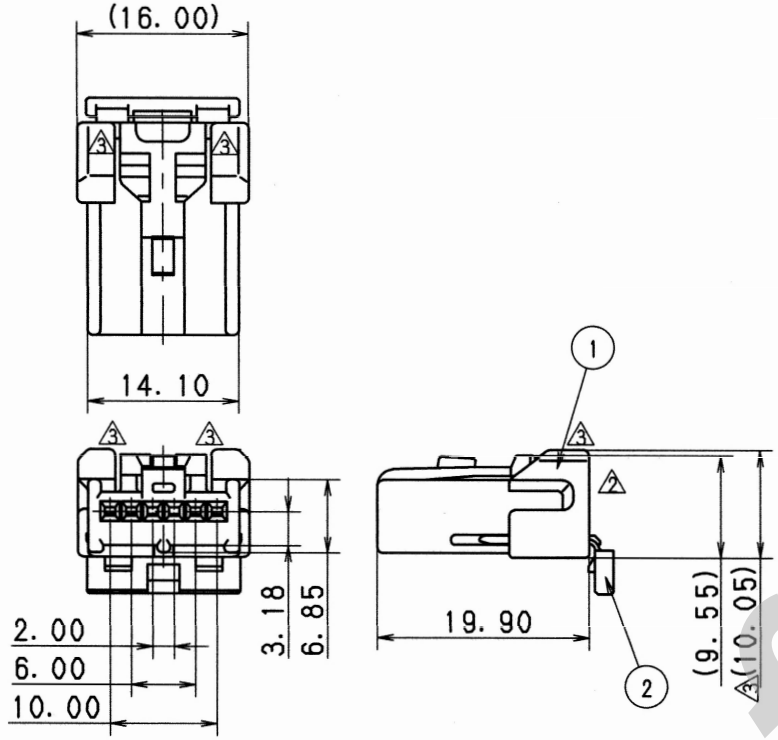

注 記

△1 1. 嵌合相手品番：7382-8660, 7382-8661, 7282-8663

△3 2. 適用端子品番：7116-1670-02 (7B16-1670-02)
7116-1670-08 (7B16-1670-08)
7116-1800-02

△2 3. ( ) 内品番は、エアバッグ (A/B) 回路及び特別管理回路に使用する時に適用すること。

NOTES

△1 1. MATING PART NO. :7382-8660, 7382-8661, 7282-8663

△3 2. APPLICABLE TERMINAL PART NO. :7116-1670-02 (7B16-1670-02)
7116-1670-08 (7B16-1670-08)
7116-1800-02

△2 3. PART NUMBERS IN PARENTHESIS SHALL BE USED FOR AIR BAG (A/B) CIRCUITS AND OTHER CIRCUITS DESIGNATED FOR SPECIAL MONITORING.

ISSUE MARK

LET	DATE	REVISION RECORD	NO.	CHKD
△4	04.05.20	ADDED COLOR PART NO.	C04-Z442	T.T
△3	99.06.02	CHANGED FORM, B	C99-L596	M.F
△2	98.11.03	CHANGED FORM ETC., A	C98-M481	O.S
△1	94.11.18	CH. REAR HOLDER COLOR	C94-M537	O.S
	91.03.14	NEW	C91-6434	H.Y

GENERAL TOLERANCE

	10MAX	50MAX	100MAX	250MAX	2500VR	ANGLE	ECCENT
A	±0.15	±0.2	±0.3	±0.5	±0.75	±30'	0.1
B	±0.2	±0.3	±0.55	±0.95	±1.4	±30'	0.1
C	±0.3	±0.5	±0.8	±1.4	±2	±30'	0.15

SPECIFIED

MASS g

CUSTOMER

CUSTOMER PART NO.

CUSTOMER DWG NO.

OFFICE

TRIAL PART NO.

VENDOR

VENDOR NO.

DWG TYPE	DWG SOURCE	DWG DATE	UNIT	SCL	ANGLE
R	CHANGE	91.03.14	mm	2/1	3

APPROVED	CHECKED	CHECKED	DESIGN	DRAWN
H. OHSUMI 大住		T. TAKAHASHI 高橋	O. SUGIYAMA	E. PANTONI
04.05.25		04.05.25	91.03.14	04.05.20

MATL. SPEC. SEE TABLE

TREAT. & FIN.

NAME A TYPE CONNECTOR 6P SUB ASSEMBLY FEMALE

PART NO. CH. CODE △4 7283-8660 ETC., (7C83-8660, B)

DWG NO. 7283-8660:R

SET DWG NO.

YAZAKI CORPORATION

Confidential