SUB ASSEMBLY PART NO. AND CH. CODE	NO.	PART NO. AND CH. CODE	PART NAME	MATERIAL (COLOR)	△2 QTY.
7283-8630 △4 (7C83-8630)	①	7183-8630 △4(7B83-8630)	A TYPE CONNECTOR HOUSING 3PF (W)	PBT (NATURAL)	1
	②	△2 7157-6770 △4(7B57-6770)	A TYPE CONNECTOR REAR HOLDER 3P	△2 PBT (NATURAL)	1
△3 7283-8630-30	①	7183-8630-30	A TYPE CONNECTOR HOUSING 3PF (B)	PBT (BLACK)	1
	②	7157-6770	A TYPE CONNECTOR REAR HOLDER 3P	PBT (NATURAL)	1

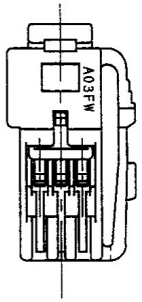

注　記

△3 1. 嵌合相手品番は、7282-8630, 7282-8631 (7283-8630)
7282-8631-30 (7283-8630-30)

△4 2. 適用端子品番は、7116-1670-02 (7B16-1670-02)
7116-1670-08 (7B16-1670-08)
7116-1800-02

△4 3. ( ) 内品番は、エアバッグ (A/B) 回路及び特別管理回路に使用する時に適用すること。

NOTES

△3 1. MATING PART NO.
:7282-8630, 7282-8631 (7283-8630)
:7282-8631-30 (7283-8630-30)

△4 2. APPLICABLE TERMINAL NO. :
7116-1670-02 (7B16-1670-02)
7116-1670-08 (7B16-1670-08)
7116-1800-02

△4 3. PART NUMBERS IN PARENTHESIS SHALL BE USED FOR AIR BAG (A/B) CIRCUITS AND OTHER CIRCUITS DESIGNATED FOR SPECIAL MONITORING.

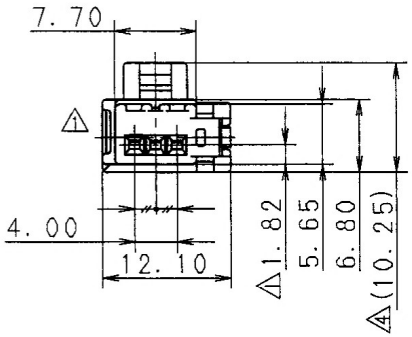

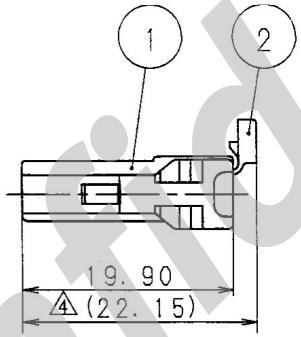

LET	DATE	REVISION RECORD	NO.	CHKD
△4	98.11.07	ADDED A/B PART NO. ETC.	C98-M886	K.U
△3	96.04.23	ADDED PART NO.	C96-6448	H.K
△2	94.11.18	CH. REAR HOLDER COLOR	C94-M537	O.S
△1	93.07.20	CHANGED FORM	C93-6831	N.S
—	90.09.17	NEW	C90-6978	H.Y

ISSUE MARK

GENERAL TOLERANCE

	10MAX	50MAX	100MAX	250MAX	2500VR	ANGLE	ECCENT
A	±0.15	±0.2	±0.3	±0.5	±0.75	±30′	0.1
B	±0.2	±0.3	±0.55	±0.95	±1.4	±30′	0.1
Ⓒ	±0.3	±0.5	±0.8	±1.4	±2	±30′	0.15

SPECIFIED　　MASS g

CUSTOMER
CUSTOMER PART NO.　　CUSTOMER DWG NO.
OFFICE　　TRIAL PART NO.
VENDOR
VENDOR NO.

DWG TYPE	DWG SOURCE	DWG DATE	UNIT	SCL	ANGLE
R	NEW	90.09.17	mm	2/1	3

APPROVED	CHECKED	CHECKED	DESIGN	DRAWN
辻	—	杉山	O. SUGIYAMA	YOSHIDA 浦野
98.11.13		98.11.13	90.09.17	98.11.07

MATL. SPEC. SEE TABLE　　TREAT. & FIN.

NAME A TYPE CONNECTOR 3P (F)
SUB ASSEMBLY

PART NO. CH. CODE △4 7283-8630 (7C83-8630) ETC.

DWG NO. 7283-8630:R　　SET DWG NO.

YAZAKI CORPORATION

Confidential