SUB ASSEMBLY PART NO. AND CH. CODE	NO.	PART NO. AND CH. CODE	MATERIAL	COLOR	⚠QTY.
7283-8280-80,A	①	7183-8280-80	PBT	BROWN	1
	②	⚠7157-4652	PBT	⚠NATURAL	1

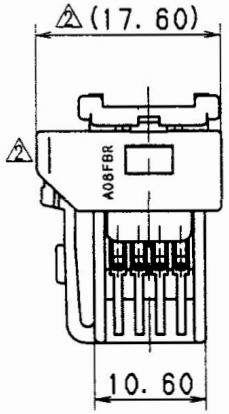

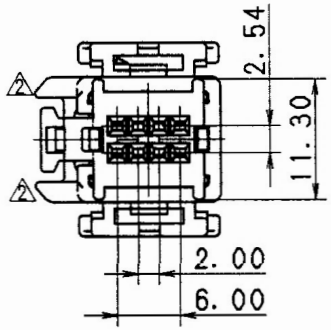

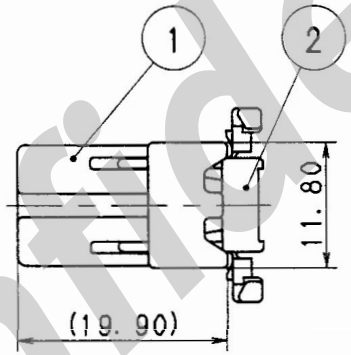

注 記

⚠ 1. 適用端子品番:7116-1670-02
:7116-1670-08
:7119-1800-02

NOTE

⚠ 1. APPLICABLE TERMINAL NO. :7116-1670-02
:7116-1670-08
:7116-1800-02

ISSUE MARK

LET	DATE	REVISION RECORD	NO.	CHKD
⚠2	99.06.24	CHANGED FORM.A	C99-L596	M.F
⚠1	94.11.18	CH. REAR HOLDER COLOR	C94-M537	O.S
	93.06.04	NEW	C93-6649	N.S

GENERAL TOLERANCE

	10MAX	50MAX	100MAX	250MAX	2500VR	ANGLE	ECCENT
A	±0.15	±0.2	±0.3	±0.5	±0.75	±30′	0.1
B	±0.2	±0.3	±0.55	±0.95	±1.4	±30′	0.1
C	±0.3	±0.5	±0.8	±1.4	±2	±30′	0.15

SPECIFIED

MASS g

CUSTOMER

CUSTOMER PART NO.	CUSTOMER DWG NO.
OFFICE	TRIAL PART NO.
VENDOR	
VENDOR NO.	

DWG TYPE	DWG SOURCE	DWG DATE	UNIT	SCL	ANGLE
R	NEW	93.06.04	mm	2/1	3

APPROVED	CHECKED	CHECKED	DESIGN	DRAWN
99.06.24	99.06.24	99.06.24	SUGIYAMA 93.06.04	NAKAO 99.06.24

MATL. SPEC. SEE TABLE

TREAT. & FIN.

NAME A TYPE CONNECTOR 8P (FBR) SUB ASSEMBLY

PART NO. CH. CODE 7283-8280-80,A

DWG NO. 7283-8280-80:R

SET DWG NO.

YAZAKI CORPORATION

Confidential