△3 TABLE 1

SUB ASSEMBLY PART NO. AND CH. CODE	NO.	PART NO. AND CH. CODE	△3 PART NAME	MATERIAL	COLOR	QTY.
△1 7283-7449 ETC.	①	SEE TABLE 2	HOUSING	HPA	SEE TABLE 2	1
	②	△1 7158-4363	HOLDER	HPA	NATURAL	1
	③	△2 7137-2669-80	PACKING	SILICONE RUBBER	BROWN	1

△2 TABLE 2

SUB ASSEMBLY PART NO. AND CH. CODE	PART NO. AND CH. CODE	COLOR
7283-7449, G	7183-7449	NATURAL
7283-7449-10, G	7183-7449-10	DARK GRAY
7283-7449-30, G	7183-7449-30	BLACK
7283-7449-40, G	7183-7449-40	LGHT GRAY
7283-7449-80, G	7183-7449-80	BROWN

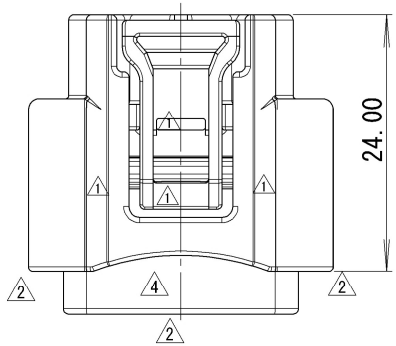

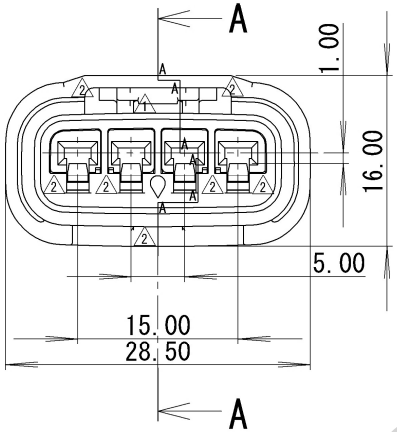

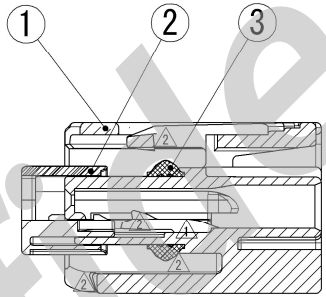

SEC. A-A

注記
1. 適用端子品番：7116－4025 ETC.
2. 適用ゴム栓品番：7158－3003－90 ETC.

NOTES
1. APPLICABLE TERMINAL NO. :7116-4025 ETC.
2. APPLICABLE RUBBER STOPPER NO. :7158-3003-90 ETC.

△4	2016/04/15	CORRECTION OF A CLERICAL ERROR, ETC.	C16-P194	Y.H
△3	2008/07/29	CHANGED PART NAME, ETC.	C08-Z518	C.T
△2	2000/12/16	CHANGED FORM, G	C00-M565	C.T
△1	1997/05/27	CHANGED FORM, B	C97-L722	S.S
	1996/11/28	NEW	C96-N173	M.T
LET	DATE	REVISION RECORD	NO.	CHKD

GENERAL TOLERANCE

	10MAX	50MAX	100MAX	250MAX	2500VR	ANGLE	ECCENT
A	±0.15	±0.2	±0.3	±0.5	±0.75	±30'	0.1
B	±0.2	±0.3	±0.55	±0.95	±1.4	±30'	0.1
C	±0.3	±0.5	±0.8	±1.4	±2	±30'	0.15

SPECIFIED

MASS

ISSUE MARK

CUSTOMER	
CUSTOMER PART NO.	CUSTOMER DWG NO.
OFFICE	TRIAL PART NO.
VENDOR	
VENDOR NO.	

DWG TYPE	DWG SOURCE	DWG DATE	UNIT	SCL	ANGLE
R	NEW	1996/11/28	mm	2:1	3

APPROVED	CHECKED	CHECKED	DESIGN	DRAWN
H.KANDA	—	—	Y.OHTA	Y.HANAI
2016/04/15	—	—	1996/08/20	2016/04/15

MATL. SPEC. SEE TABLE 1

TREAT. & FIN.

NAME △4 2.3Ⅱ 4P SEALED

HOUSING FEMALE SUB ASSEMBLY

PART NO. CH. CODE 7283-7449 ETC. △1

DWG NO. 7283-7449:R △1

SET DWG NO.

YAZAKI CORPORATION

Confidential