(2/1)

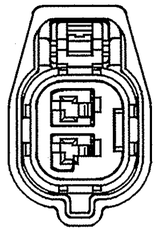

7283-6433 (TYPE C)

(2/1)

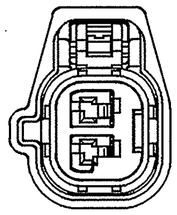

7283-6434-40 (TYPE D)

(2/1)

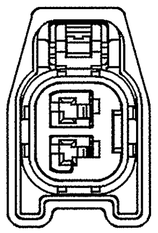

7283-6435-30 (TYPE E)

TABLE 1	SUB ASSEMBLY PART NUMBER	NO.	PART NUMBER	PART NAME	MATERIAL	COLOR	QUANTITY
	7283-6432-10 ETC.	①	SEE TABLE 2	2P 1.5mm YESC SEALED FEMALE HOUSING	HPA	SEE TABLE 2	1
		②	7158-4269	2P 1.5mm YESC SEALED FEMALE TPA	HPA	NATURAL	1
		③	7137-2795-50	2P 1.5mm YESC FEMALE INTERFACE SEAL	SILICONE	RED	1
		④	7158-8090-50	1.5mm YESC SEALED CPA	HPA	RED	1

TABLE 2	SUB ASSEMBLY PART NUMBER	HOUSING PART NUMBER	KEYWAY	CPA	COLOR
	7283-6432-10	7183-6432-10	B	YES	DARK GREY
	7283-6433	7183-6433	C	YES	NATURAL
	7283-6434-40	7183-6434-40	D	YES	LIGHT GREY
	7283-6435-30	7183-6435-30	E	YES	BLACK

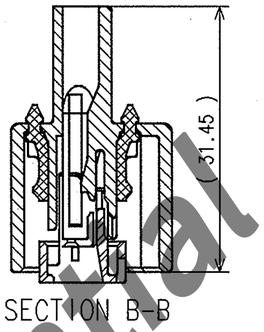

SECTION B-B

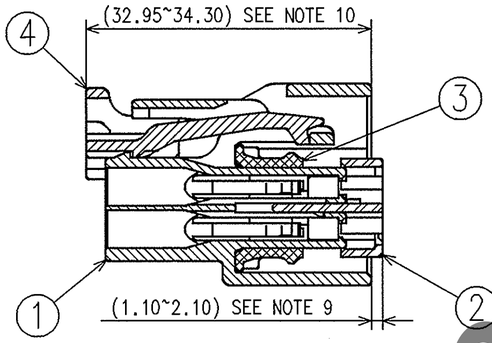

SECTION A-A

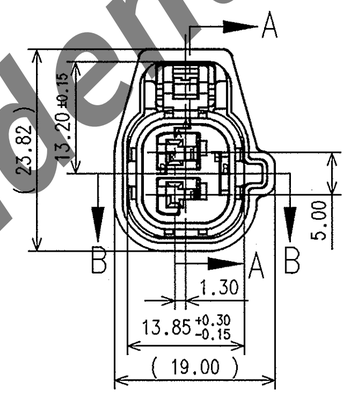

NOTES:

1. PARTS MUST BE PURCHASED FROM YAZAKI.
2. PARTS MUST BE FREE OF FLASH AND IMPERFECTIONS THAT AFFECT FUNCTION.
3. APPLICABLE TERMINAL: SEE 7116-4102-02:R DRAWING. (1.5mm YESC)
4. APPLICABLE WIRE SEAL: SEE 7158-3030-50:R DRAWING. (1.5mm YESC)
5. APPLICABLE CAVITY PLUG: SEE 7158-3032-60:R DRAWING. (1.5mm YESC)
6. MATING PART NUMBER: DEVICE
7. PART DESIGNED TO SATISFY USCAR-2, REVISION 3, APRIL 2001, CLASS 3.
8. PART TO COMPLY WITH YPES-31-038 REQUIREMENTS.
9. THIS DIMENSION SHOWS THE PRE-SET POSITION OF THE TPA.
10. THIS DIMENSION SHOWS THE PRE-SET POSITION OF THE CPA.
11. THIS DRAWING IS TO BE USED FOR INTERNAL YAZAKI PSW SUBMISSION.

Confidential

ISSUE MARK

LET	DATE	REVISION RECORD	NO.	CHKD
-	06.21.10	NEW	C10-A415	M.R.

GENERAL TOLERANCE	10 MAX	50 MAX	100 MAX	250 MAX	250 OVR	ANGLE	ECCENT
A	±0.15	±0.2	±0.3	±0.5	±0.75	±30′	0.1
B	±0.2	±0.3	±0.55	±0.95	±1.4	±30′	0.1
Ⓒ	±0.3	±0.5	±0.8	±1.4	±2	±30′	0.15
SPECIFIED						MASS	g

CUSTOMER		MATL. SPEC. SEE TABLE 1	TREAT & FIN.
CUSTOMER PART NO.	CUSTOMER DWG NO.	NAME	2P 1.5mm YESC SEALED FEMALE SUB ASSEMBLY
OFFICE YNA	TRIAL PART NO.		
VENDOR			
VENDOR NO.			

DWG TYPE	DWG SOURCE	DWG DATE	UNIT	SCL	ANGLE
R	7283-6432-10:M ⚠1	06.21.10	mm	2/1	3

APPROVED	CHECKED	CHECKED	DESIGN	DRAWN
			MIKE MEARING	ALEJANDRO BELTRAN
06.23.10	06.24.10	06.27.10	06.13.00	06.22.10

PART NO. / CH. CODE: 7283-6432-10 ETC.

DWG NO.: 7283-6432-10:R

YAZAKI CORPORATION