SUB ASS'Y PART NO.	NO.	PART NO.	PART NAME	MATERIAL (COLOR)	QTY.
7283-5017-90	①	7183-5017-90	A TYPE CONNECTOR HOUSING 12P(FL)	PBT (BLUE)	1
	②	⚠1 7157-6590	A TYPE CONNECTOR REAR HOLDER 12P(F)II	⚠1 PBT (NATURAL)	1

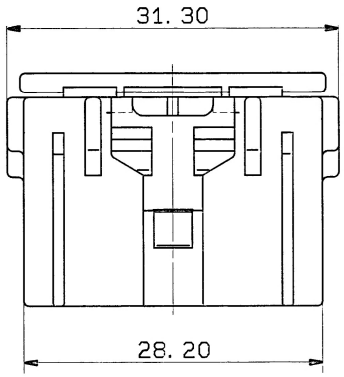

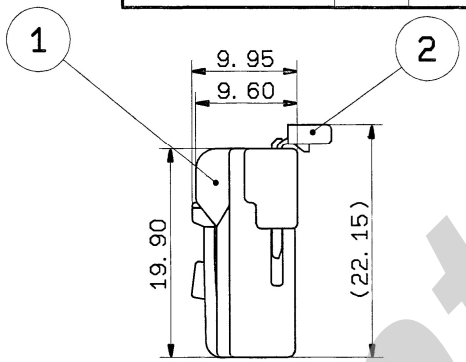

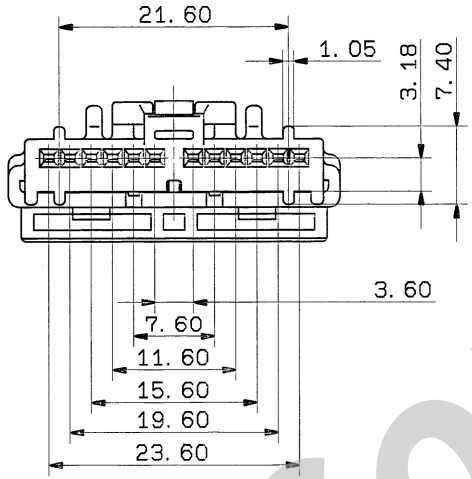

注 記

1. 嵌合相手品番: 7382-5017-90

⚠1 2. 使用端子品番: 7116-1670-02, 7116-1800-02.

NOTES

1. MATING PART NO. : 7382-5017-90

⚠1 2. APPLICABLE TERMINAL NO. :7116-1670-02,
:7116-1800-02.

ISSUE MARK

LET	DATE	REVISION RECORD	NO.	CHKD
⚠1	94.11.18	CH. REAR HOLDER COLOR	C94-M537	O.S
—	93.06.18	NEW	C93-L016	K.K

GENERAL TOLERANCE

	10MAX	50MAX	100MAX	250MAX	2500VR	ANGLE	ECCENT
A	±0.15	±0.2	±0.3	±0.5	±0.75	±30'	0.1
B	±0.2	±0.3	±0.55	±0.95	±1.4	±30'	0.1
C	±0.3	±0.5	±0.8	±1.4	±2	±30'	0.15

SPECIFIED

MASS g

CUSTOMER

CUSTOMER PART NO. | CUSTOMER DWG NO.

OFFICE | TRIAL PART NO.

VENDOR

VENDOR NO.

DWG TYPE	DWG SOURCE	DWG DATE	UNIT	SCL	ANGLE
R	NEW		mm	2/1	3

APPROVED	CHECKED	CHECKED	DESIGN	DRAWN
川木		辻	TAKESHITA	ITOH 杉山修
'94.11.25		94.11.24	93.06.18	94.11.18

MATL. SPEC. SEE TABLE | TREAT. & FIN.

NAME A TYPE CONNECTOR 12P (FL) SUB ASS'Y

PART NO. / CH. CODE 7283-5017-90

DWG NO. 7283-5017-90:R

YAZAKI CORPORATION

Confidential