SUB ASS'Y PART NO.	NO.	PART NO.	PART NAME	MATERIAL (COLOR)	QTY.
7283-5015-30	①	7183-5015-30	A TYPE CONNECTOR HOUSING 12P(FB)	PBT (BLACK)	1
	②	⚠1 7157-6590	A TYPE CONNECTOR REAR HOLDER 12P(F)II	⚠1 PBT (NATURAL)	1

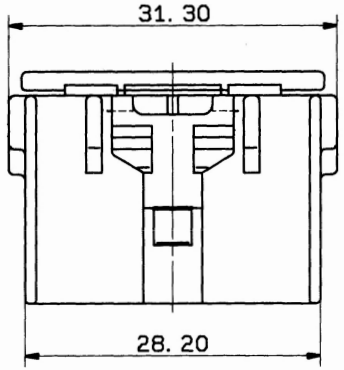

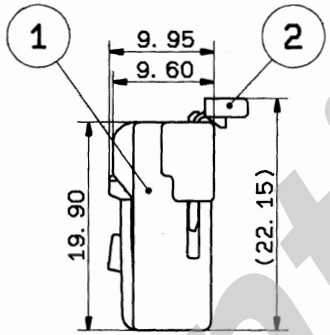

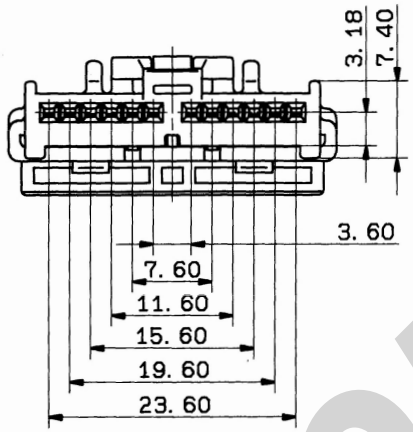

注記

1. 嵌合相手品番: 7382-5015-30

⚠1 2. 使用端子品番: 7116-1670-02, 7116-1800-02.

NOTES

1. MATING PART NO. : 7382-5015-30

⚠1 2. APPLICABLE TERMINAL NO. :7116-1670-02
:7116-1800-02.

ISSUE MARK

⚠1	94.11.18	CH. REAR HOLDER COLOR	C94-M537	O.S
—	93.05.20	NEW	C93-L015	K.K
LET	DATE	REVISION RECORD	NO.	CHKD

GENERAL TOLERANCE

	10MAX	50MAX	100MAX	250MAX	2500VR	ANGLE	ECCENT
A	±0.15	±0.2	±0.3	±0.5	±0.75	±30'	0.1
B	±0.2	±0.3	±0.55	±0.95	±1.4	±30'	0.1
©	±0.3	±0.5	±0.8	±1.4	±2	±30'	0.15

SPECIFIED

MASS g

CUSTOMER						
CUSTOMER PART NO.		CUSTOMER DWG NO.				
OFFICE		TRIAL PART NO.				
VENDOR						
VENDOR NO.						
DWG TYPE	DWG SOURCE	DWG DATE	UNIT	SCL	ANGLE	
R	NEW	93.05.20	mm	2/1	3	
APPROVED	CHECKED	CHECKED	DESIGN	DRAWN		
八木 94.11.25		辻 94.11.24	KOUYAMA 93.05.20	ITOH 杉山修 94.11.18		

MATL. SPEC.	SEE TABLE
TREAT. & FIN.	
NAME	A TYPE CONNECTOR 12P (FB) SUB ASS'Y
PART NO. CH. CODE	7283-5015-30
DWG NO.	7283-5015-30:R
	YAZAKI CORPORATION

Confidential