SUB ASSEMBLY PART NO. AND CH. CODE	NO.	PART NO. AND CH. CODE	MATERIAL	COLOR	QTY.
7283-1119-30, C	1	7183-1119-30	PBT	BLACK	1
	2	7157-4067	PBT	NATURAL	1

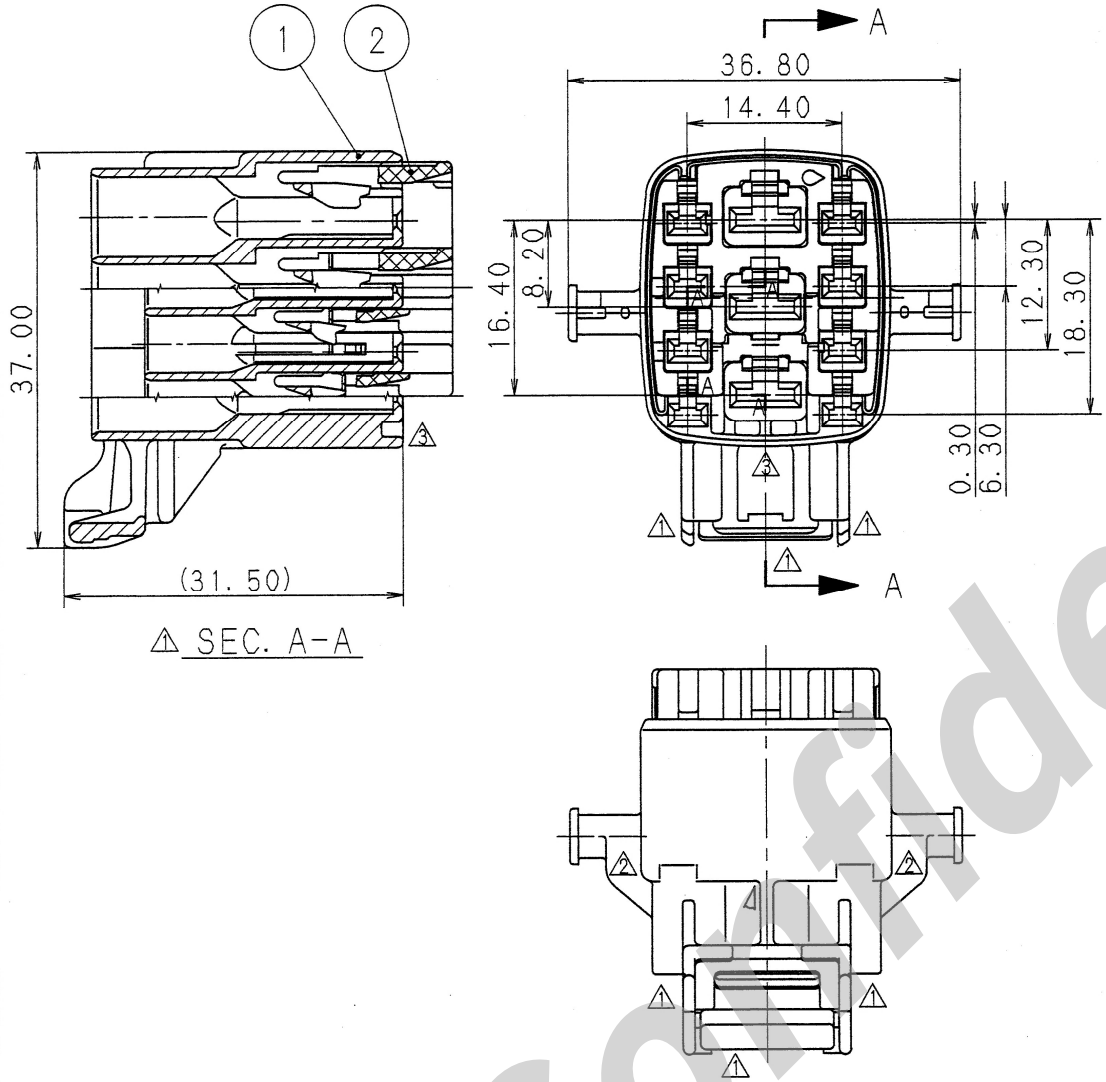

注記

1. 嵌合相手品番 : 7282-1119-30
3 2. 適用端子品番 : 2.3Ⅱ(090Ⅱ) 7116-4025 ETC.
4.8(187) 7116-4035 ETC.

NOTES

1. MATING PART NO. : 7282-1119-30
3 2. APPLICABLE TERMINAL NO. : 2.3Ⅱ(090Ⅱ) 7116-4025 ETC.
4.8(187) 7116-4035 ETC.

Confidential

ISSUE MARK

LET	DATE	REVISION RECORD	NO.	CHKD
3	02.02.22	CHANGED FORM, C	C02-X262	K.F
2	99.10.26	CHANGED FORM, B	C99-M612	N.T
1	98.05.13	CHANGED FORM, A	C98-L822	J.S
	95.09.27	NEW	C95-M551	Y.Y

GENERAL TOLERANCE

	10MAX	50MAX	100MAX	250MAX	2500OVR	ANGLE	ECCENT
A	±0.15	±0.2	±0.3	±0.5	±0.75	±30′	0.1
B	±0.2	±0.3	±0.55	±0.95	±1.4	±30′	0.1
C	±0.3	±0.5	±0.8	±1.4	±2	±30′	0.15

SPECIFIED

MASS g

CUSTOMER
CUSTOMER PART NO. | CUSTOMER DWG NO.
OFFICE | TRIAL PART NO.
VENDOR
VENDOR NO.

DWG TYPE	DWG SOURCE	DWG DATE	UNIT	SCL	ANGLE
R	NEW	95.09.27	mm	2/1	3

APPROVED	CHECKED	CHECKED	DESIGN	DRAWN
上田	山本	繁	H. TAKAHASHI	OHKUBO 藤本
02.2.27	02.02.27	02.02.26	95.10.11	02.02.22

MATL. SPEC. SEE TABLE | TREAT. & FIN.

NAME 2.3Ⅱ(090Ⅱ) 8P+4.8(187) 3P LIF SEALED
3 CONNECTOR HOUSING FEMALE SUB ASSEMBLY

PART NO. CH. CODE 7283-1119-30, C

DWG NO. 7283-1119-30:R | SET DWG NO.

YAZAKI CORPORATION