SUB ASS'Y PART NO.	NO.	YAZAKI PART NO.	MATERIAL	COLOR	QTY.
7282-1465 ETC.	①	SEE TABLE	PBT	SEE TABLE	1
	②	7157-4572	PBT	NATURAL	1
	③	SEE TABLE	PBT	SEE TABLE	1
	④	7137-2276-30	NBR	BLACK	1

YAZAKI SUB ASS'Y NO.	YAZAKI HOUSING PART NO.	PACKING HOLDER PART NO.	COLOR
7282-1465	7182-1465	7157-4252	NATURAL
7282-1465-10	7182-1465-10	7157-4252-10	DARK GRAY
7282-1465-30	7182-1465-30	7157-4252-30	BLACK
7282-1465-40	7182-1465-40	7157-4252-40	LIGHT GRAY
7282-1465-50	7182-1465-50	7157-4252-50	ORANGE
7282-1465-60	7182-1465-60	7157-4252-60	GREEN
7282-1465-80	7182-1465-80	7157-4252-80	BROWN
7282-1465-90	7182-1465-90	7157-4252-90	BLUE

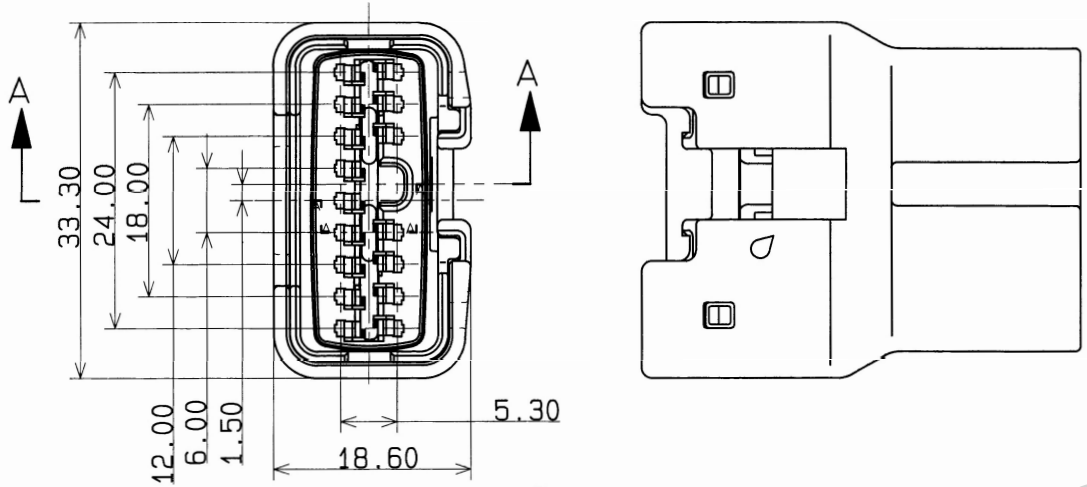

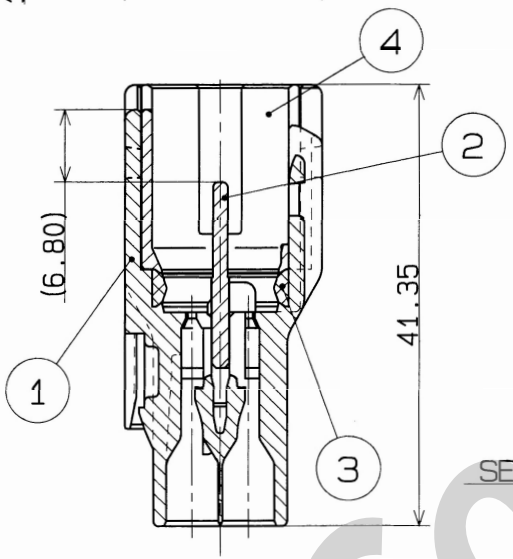

SEC. A-A

注 記

1) 適用端子品番: 7114-4060-02

2) 嵌合相手品番: 7283-1465 ETC.

NOTES

1) APPLICABLE TERMINAL NO.: 7114-4060-02

2) MATING PART NO.: 7283-1465 ETC.

ISSUE MARK

LET	DATE	REVISION RECORD	NO.	CHKD
	92.07.30	NEW	C92-L653	Y.G

GENERAL TOLERANCE

	10MAX	50MAX	100MAX	250MAX	2500VR	ANGLE	ECCENT
A	±0.15	±0.2	±0.3	±0.5	±0.75	±30'	0.1
B	±0.2	±0.3	±0.55	±0.95	±1.4	±30'	0.1
Ⓒ	±0.3	±0.5	±0.8	±1.4	±2	±30'	0.15

SPECIFIED

MASS g

CUSTOMER

CUSTOMER PART NO. | CUSTOMER DWG NO.

OFFICE | TRIAL PART NO.

VENDOR

VENDOR NO.

DWG TYPE	DWG SOURCE	DWG DATE	UNIT	SCL	ANGLE
R	NEW	92.07.30	mm	2/1	3

APPROVED	CHECKED	CHECKED	DESIGN	DRAWN
遠藤		石崎	KODAMA	ISHIZUKA 鄭野
'92.08.07		'92.7.30	92.01.29	92.07.30

MATL. SPEC. SEE TABLE | TREAT. & FIN.

NAME 050 16P SEALED CONNECTOR HOUSING MALE SUB ASS'Y

PART NO. 7282-1465 ETC.

DWG NO. 7282-1465: R

YAZAKI CORPORATION

Confidential