YAZAKI SUB ASS'Y PART NO.	NO.	YAZAKI PART NO.	MATERIAL	QTY.
7223-6586-30	1	7123-6586-30	PBT(BLACK)	1
	2	7137-2587-80	△1 SILICONE RUBBER (BROWN)	1

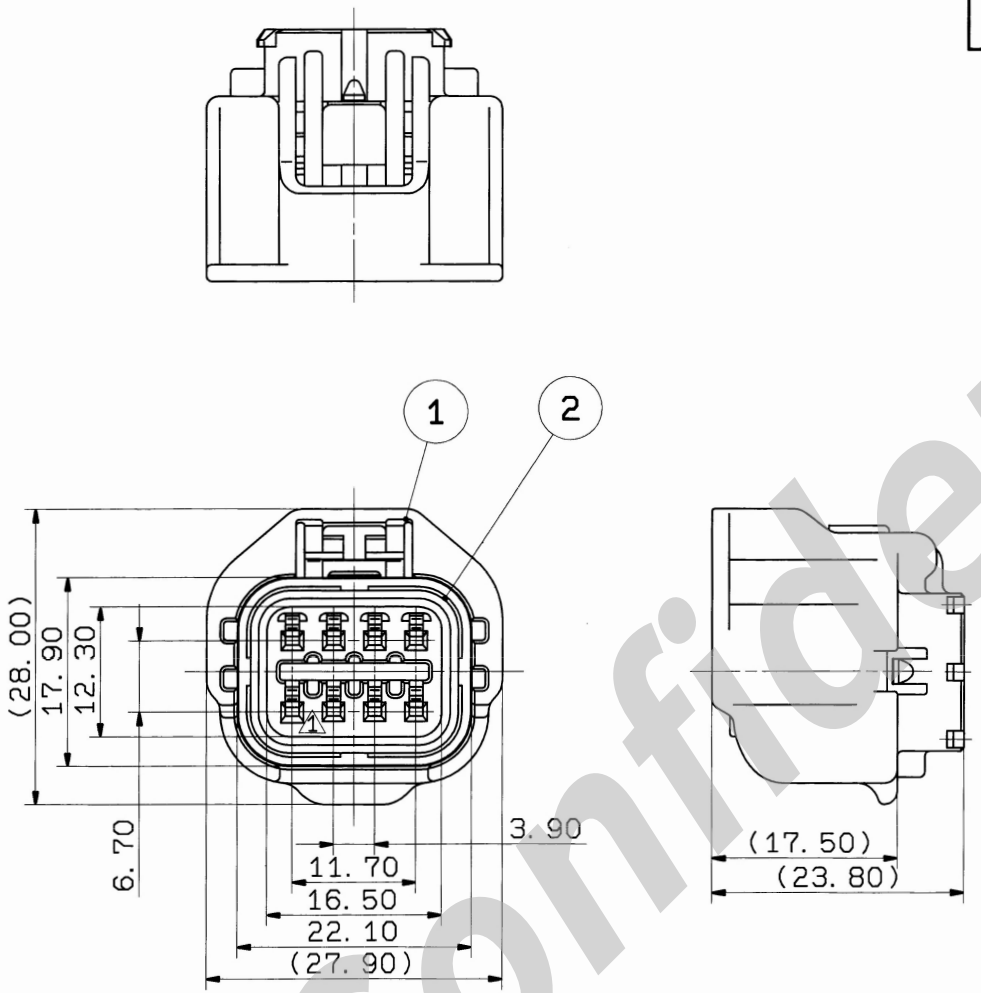

注 記

1) 適用端子品番 :7116-1467-02 ETC.

2) 適用リヤホルダ品番:7157-6700-80

NOTES

1) APPLICABLE TERMINAL NO.
:7116-1467-02 ETC.

2) APPLICABLE REAR HOLDER NO.
:7157-6700-80

ISSUE MARK

LET	DATE	REVISION RECORD	NO.	CHKD
△1	96. 08. 26	CHANGED FORM	C96-L513	H. A
	93. 09. 09	NEW	C93-6960	S. K

GENERAL TOLERANCE

	10MAX	50MAX	100MAX	250MAX	2500VR	ANGLE	ECCENT
A	±0.15	±0.2	±0.3	±0.5	±0.75	±30'	0.1
B	±0.2	±0.3	±0.55	±0.95	±1.4	±30'	0.1
©	±0.3	±0.5	±0.8	±1.4	±2	±30'	0.15

SPECIFIED

MASS g

CUSTOMER

CUSTOMER PART NO.

CUSTOMER DWG NO.

OFFICE

TRIAL PART NO.

VENDOR

VENDOR NO.

DWG TYPE	DWG SOURCE	DWG DATE	UNIT	SCL	ANGLE
R	NEW	93. 09. 09	mm	2/1	3

APPROVED	CHECKED	CHECKED	DESIGN	DRAWN
神田 96.08.30	辻 96.08.26	樫山 96.08.26	K. ABE 92. 05. 14	KUROSAWA 黒沢 96. 08. 26

MATL. SPEC. SEE TABLE

TREAT. & FIN.

NAME RV-TYPE CONNECTOR 8PF(B) SUB ASS'Y

PART NO. CH. CODE 7223-6586-30

DWG NO. 7223-6586-30:R

YAZAKI CORPORATION

Confidential