QUANTITY								NO.	YAZAKI PART NO.	YAZAKI PART NAME	MATL.	COLOR
1				1				①	7123-5545	250 (MC) CONNECTOR HOUSING FEMALE 4P (CLIP)	PBT	NATURAL
	1				1				7123-5545-30			BLACK
		1				1			7123-5545-60			GREEN
			1				1		7123-5545-90			BLUE
1	1	1	1	1	1	1	1	②	7157-4927-70	250 (MC) CONNECTOR HOLDER FEMALE 4P	PBT	YELLOW
				1	1	1	1	③	7157-4894-50	250 (MC) CONNECTOR 2 LOCK SPACER	PBT	RED
7223-5549	7223-5549-30	7223-5549-60	7223-5549-90	7223-5545	7223-5545-30	7223-5545-60	7223-5545-90	SUB ASS'Y PART NO.				

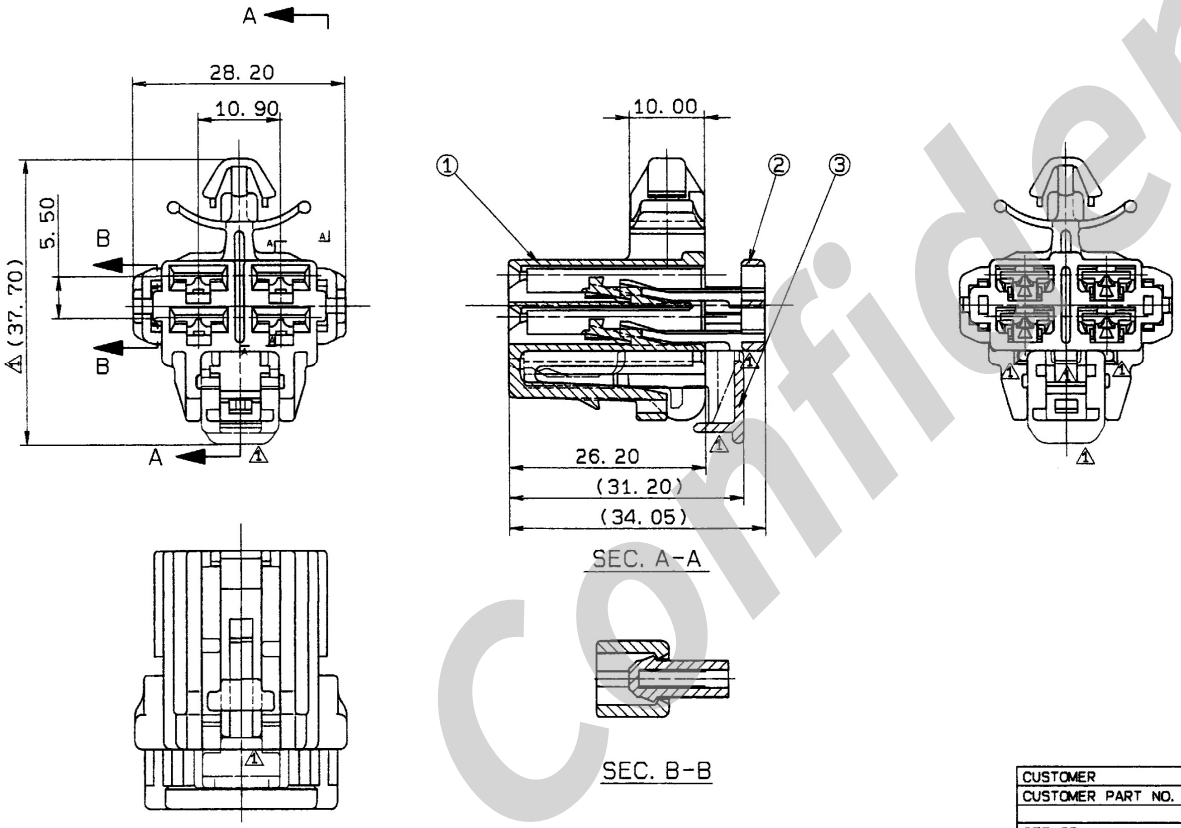

NOTES
1. APPLICABLE TERMINAL PART NO. : 7116-2640, 2641, 2642
2. MATING PART NO. : 7222-5545 ETC.

注　記
1. 適用端子品番：7116-2640, 2641, 2642
2. 嵌合相手品番：7222-5545 ETC.

LET	DATE	REVISION RECORD	NO.	CHKD
2	91. 04. 18	ADDED PART NO.	C91-6614	I. I
1	90. 09. 07	CHANGED FORM	C90-L882	M. Y
	88. 12. 24	NEW	C89-L079	M. Y

GENERAL TOLERANCE

	10MAX	50MAX	100MAX	250MAX	2500VR	ANGLE	ECCENT
A	±0.15	±0.2	±0.3	±0.5	±0.75	±30'	0.1
B	±0.2	±0.3	±0.55	±0.95	±1.4	±30'	0.1
©	±0.3	±0.5	±0.8	±1.4	±2	±30'	0.15
SPECIFIED						WEIGHT	g

CUSTOMER						
CUSTOMER PART NO.	CUSTOMER DWG NO.					
OFFICE	STDL18 NO.					
VENDOR						
VENDOR NO.						
DWG TYPE	DWG SOURCE	DWG DATE	UNIT	SCL	ANGLE	
R	NEW	88. 12. 26	mm	2/1	3	
APPROVED	CHECKED	CHECKED	DESIGN	DRAWN		
			NORIZUKI	IMAMURA		
91. 09. 29	91. 04. 22	91. 04. 18	88. 05. 20	91. 04. 18		

MATL. SPEC. SEE TABLE
TREAT. & FIN.
NAME 250 (MC) CONNECTOR SUB ASS'Y FEMALE 4P (CLIP)
PART NO. 7223-5545 ETC.
DWG NO. 7223-5545:R
TRIAL PART NO. 088723-1127 ETC.
YAZAKI CORPORATION

ISSUE MARK

Confidential