YAZAKI PART NO.	COLOR
7183-4030	NATURAL
7183-4030-30	BLACK

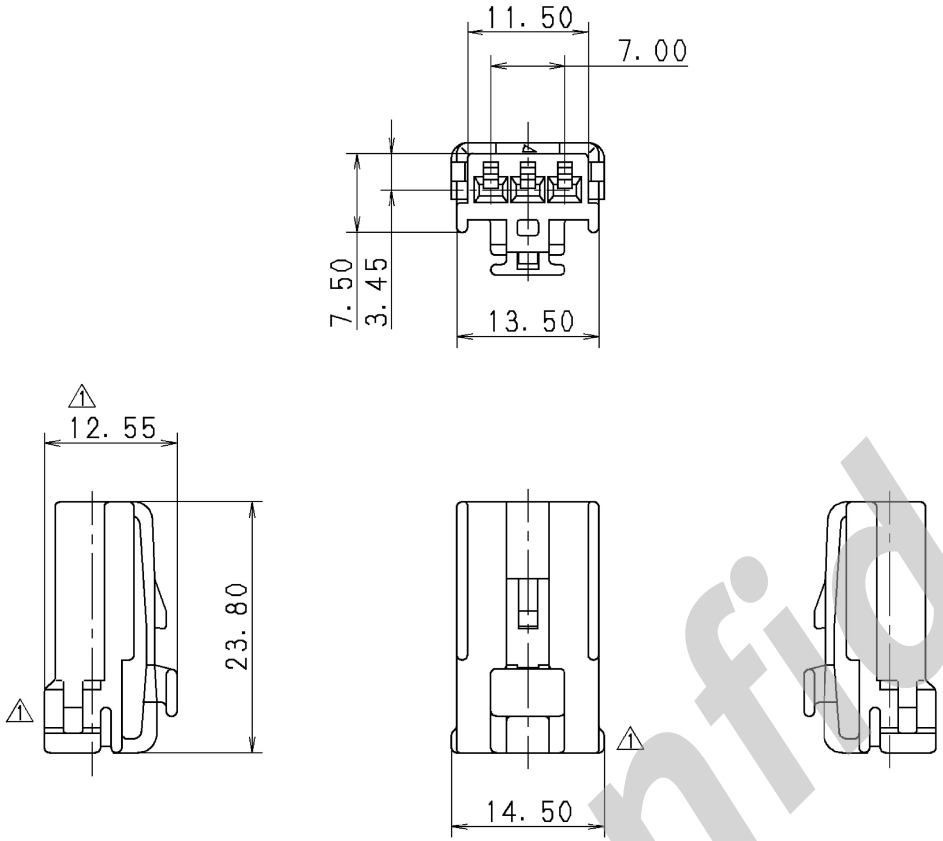

注　記

1. かん合相手品番 ： 7122-8336 ETC., 7182-4030 ETC.
2. 適用ターミナル品番 ： 7116-1486-02, 7116-1486-08
   7116-1487-02
3. 適用リヤホルダ品番 ： 7157-4581-90

NOTES

1. MATING PART NO. : 7122-8336 ETC., 7182-4030 ETC.
2. APPLICABLE TERMINAL NO. : 7116-1486-02, 7116-1486-08
   7116-1487-02
3. APPLICABLE REAR HOLDER NO. : 7157-4581-90

ISSUE MARK

LET	DATE	REVISION RECORD	NO.	CHKD
2	10.11.15	CHANGED PART NAME	C10-ZB07	R.B
1	93.03.26	CHANGED FORM, TERMINAL PART NO., & R/H COLOR NO.	C93-6396	T.M
	92.04.28	NEW	C92-L207	S.I

GENERAL TOLERANCE

	10MAX	50MAX	100MAX	250MAX	2500VR	ANGLE	ECCENT
A	±0.15	±0.2	±0.3	±0.5	±0.75	±30′	0.1
B	±0.2	±0.3	±0.55	±0.95	±1.4	±30′	0.1
C	±0.3	±0.5	±0.8	±1.4	±2	±30′	0.15

SPECIFIED　　MASS

CUSTOMER
CUSTOMER PART NO.　　CUSTOMER DWG NO.
OFFICE　　TRIAL PART NO.
VENDOR
VENDOR NO.

DWG TYPE	DWG SOURCE	DWG DATE	UNIT	SCL	ANGLE
R	NEW	92.04.28	mm	2/1	3

APPROVED	CHECKED	CHECKED	DESIGN	DRAWN
S. MIZUSE	———	R. DE GUZMAN	M. ABE	R. BUCE
10.11.15	———	10.11.15	91.09.26	10.11.15

MATL. SPEC. PBT　　TREAT. & FIN.

NAME 2 SDLII HOUSING 3P FEMALE

PART NO. 7183-4030 ETC.

DWG NO. 7183-4030 :R

YAZAKI CORPORATION

Confidential