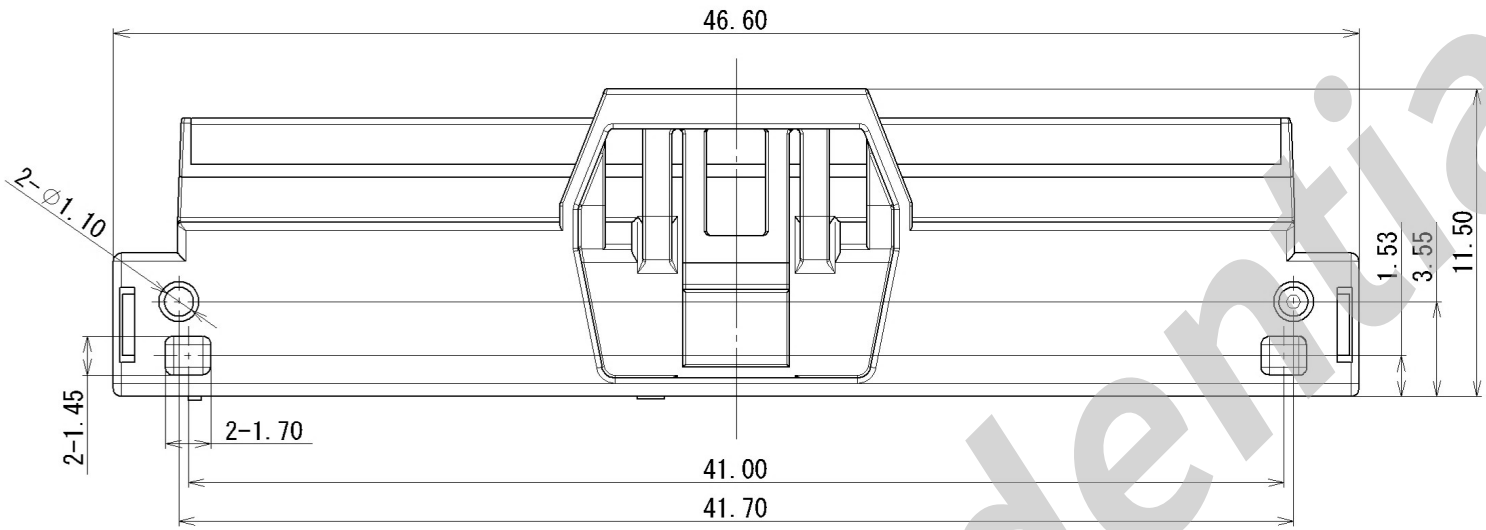

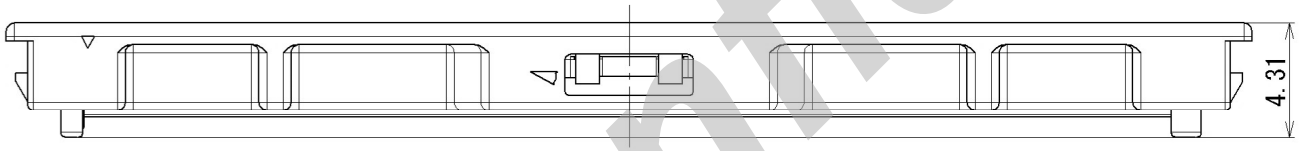

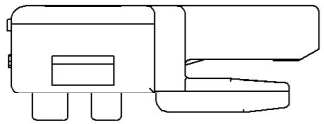

注記

1. かん合相手コネクタ品番：7325-4220
2. 組み付けカバー品番：7173-1468-30

NOTES

1. MATING CONNECTOR PART No : 7325-4220
2. MATING COVER PART No : 7173-1468-30

ISSUE MARK

Confidential

	2010/03/08	NEW	C10-P109	K.O	
LET	DATE	REVISION RECORD	NO.	CHKD	

GENERAL TOLERANCE

	10MAX	50MAX	100MAX	250MAX	2500VR	ANGLE	ECCENT
A	±0.15	±0.2	±0.3	±0.5	±0.75	±30'	0.1
B	±0.2	±0.3	±0.55	±0.95	±1.4	±30'	0.1
Ⓒ	±0.3	±0.5	±0.8	±1.4	±2	±30'	0.15

SPECIFIED

MASS 0.82 g

CUSTOMER	
CUSTOMER PART NO.	CUSTOMER DWG NO.
OFFICE	TRIAL PART NO.
VENDOR	
VENDOR NO.	

DWG TYPE	DWG SOURCE	DWG DATE	UNIT	SCL	ANGLE
R	NEW	2010/03/08	mm	5:1	3

APPROVED	CHECKED	CHECKED	DESIGN	DRAWN
T.OSHIMA	K.JINNO	———	K.OHYAMA	K.OHYAMA
2010/03/08	2010/03/08	———	2010/03/08	2010/03/08

MATL. SPEC.	PBT-G(BLACK)
TREAT. & FIN.	
NAME	YFC05Ⅱ(80) SLIDER
PART NO. CH. CODE	7173-1467-30
DWG NO.	7173-1467-30:R
SET DWG NO.	

YAZAKI CORPORATION