STDLIB-SW2016

RUBBER PART GENERAL TOLERANCE.			
PART DIM.	1	2	③
0 TO 3	±0.2	±0.3	±0.4
3 TO 6	±0.2	±0.4	±0.5
6 TO 10	±0.3	±0.5	±0.6
10 TO 18	±0.3	±0.6	±0.8
18 TO 30	±0.4	±0.8	±1.0
30 TO 50	±0.5	±1.0	±1.5
50 TO 80	±0.6	±1.2	±2.0
80 TO 120	±0.7	±1.4	±2.5
120 TO 180	±0.8	±1.6	±3.0
180 TO 250	±1.0	±2.0	±4.0
250 TO 315	±1.2	±2.5	±5.0
315 TO 400	±1.5	±3.0	±6.0
400 TO 500	±1.8	±3.5	±7.0
500 OVER	±0.4 %	±0.8 %	±1.5 %

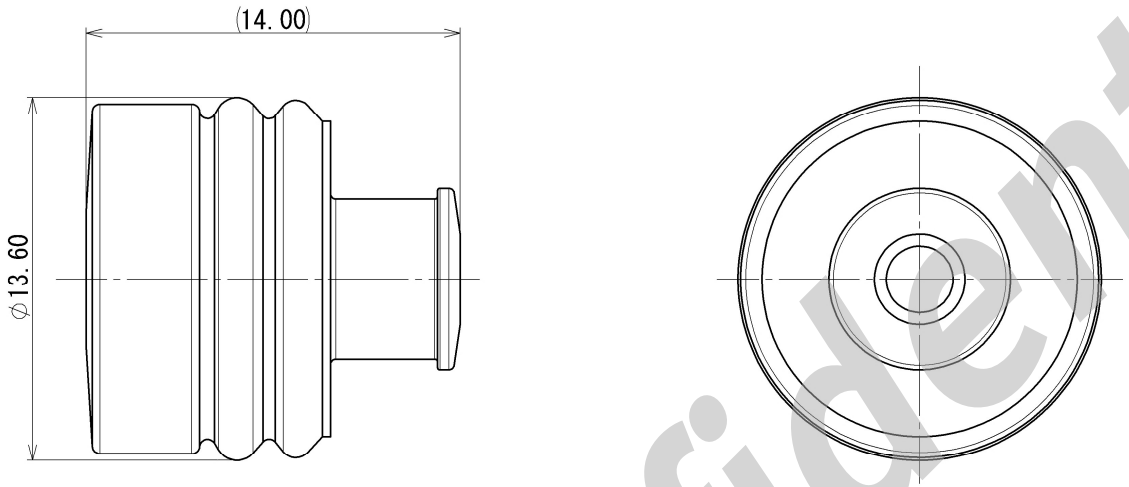

注記

△1. 適用電線サイズ : AVS/AVX/AEX 5.0

NOTE

△1. APPLICABLE WIRE SIZE: AVS/AVX/AEX 5.0

Confidential

ISSUE MARK

LET	DATE	REVISION RECORD	NO.	CHKD
△1	2018/09/28	CHANGED NOTES, ETC.	C18-P258	Y.M
	2005/11/25	NEW	C05-ZF82	T.T

GENERAL TOLERANCE

	10MAX	50MAX	100MAX	250MAX	2500VR	ANGLE	ECCENT
A	±0.15	±0.2	±0.3	±0.5	±0.75	±0.5°	0.1
B	±0.2	±0.3	±0.55	±0.95	±1.4	±1.0°	0.1
C	±0.3	±0.5	±0.8	±1.4	±2	±1.5°	0.15

SPECIFIED

MASS △1(1.4) g

CUSTOMER

CUSTOMER PART NO.

CUSTOMER DWG NO.

OFFICE

TRIAL PART NO. or PRODUCT NO.

VENDOR

VENDOR NO.

DWG TYPE	DWG SOURCE	DWG DATE	UNIT	SCL	ANGLE
R	NEW	2005/11/25	mm	5:1	3

APPROVED	CHECKED	CHECKED	DESIGN	DRAWN
N. TAGUCHI	K. FUKUDA	———	M. SUZUKI	Y. MAEDA
2018/09/28	2018/09/28	———	2005/10/31	2018/09/28

MATL. SPEC. SILICONE RUBBER (GREEN)

TREAT. & FIN.

NAME 375 TYPE RUBBER STOPPER (M SIZE)

PART NO. CH. CODE 7158-3611-60

DWG NO. 7158-3611-60:R

SET DWG NO.

YAZAKI Corporation

A3