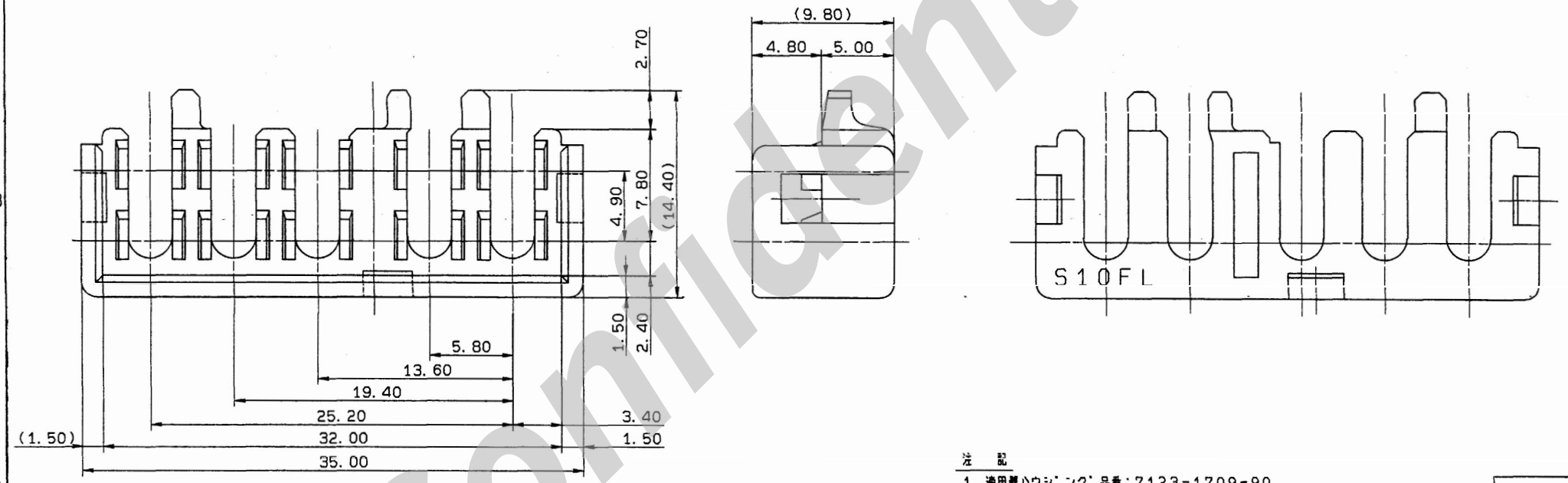

注　記

1. 適用雌ハウジング品番：7123-1709-90

NOTE

1. APPLICABLE FEMALE HOUSING NO. :7123-1709-90

ISSUE MARK

	88. 12. 08	NEW	8MC-3172	T. M
LET	DATE	REVISION RECORD	NO.	CHKD

GENERAL TOLERANCE

	10MAX	50MAX	100MAX	250MAX	2500VR	ANGLE	ECCENT
A	±0.15	±0.2	±0.3	±0.5	±0.75	±30'	0.1
B	±0.2	±0.3	±0.55	±0.95	±1.4	±30'	0.1
C	±0.3	±0.5	±0.8	±1.4	±2	±30'	0.15

SPECIFIED

WEIGHT 9

CUSTOMER					
CUSTOMER PART NO.		CUSTOMER DWG NO.			
OFFICE		STDLIB NO.			
VENDOR					
VENDOR NO.					
DWG TYPE	DWG SOURCE	DWG DATE	UNIT	SCL	ANGLE
R	NEW	88. 11. 07	mm	5/1	3
APPROVED	CHECKED	CHECKED	DESIGN	DRAWN	
K. sato		T. Maejima	ISHIZUKA	S. YAGI	
88.12.12		88.12.09	83. 06. 30	88. 11. 07	

MATL. SPEC. NYLON(LIGHT BLUE) TREAT. & FIN.

NAME REAR HOLDER

FOR S TYPE CONNECTOR 10PF(L)

PART NO. 7157-6103-90

DWG NO. 7157-6103-90:R

TRIAL PART NO.

YAZAKI CORPORATION

Confidential