YAZAKI PART NO.	COLOR	APPLICABLE PART NO.	
		MALE	FEMALE
7157-6024	NATURAL	7122-1623-30	7123-1623-30
7157-6024-20	VIOLET		

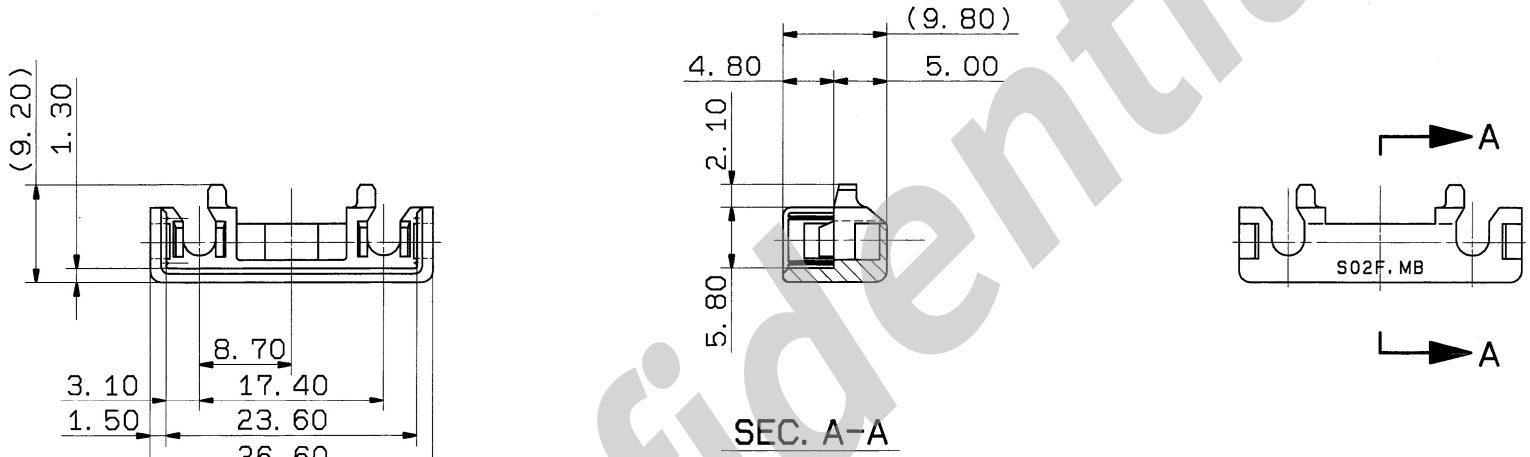

Confidential

ISSUE MARK

LET	DATE	REVISION RECORD	NO.	CHKD
	95.08.08	NEW	C95-M245	M.O

GENERAL TOLERANCE

	10MAX	50MAX	100MAX	250MAX	2500VR	ANGLE	ECCENT
A	±0.15	±0.2	±0.3	±0.5	±0.75	±30'	0.1
B	±0.2	±0.3	±0.55	±0.95	±1.4	±30'	0.1
©	±0.3	±0.5	±0.8	±1.4	±2	±30'	0.15

SPECIFIED

MASS g

CUSTOMER

CUSTOMER PART NO. | CUSTOMER DWG NO.

OFFICE | TRIAL PART NO.

VENDOR

VENDOR NO.

DWG TYPE	DWG SOURCE	DWG DATE	UNIT	SCL	ANGLE
R	NEW	95.08.08	mm	2/1	3

APPROVED	CHECKED	CHECKED	DESIGN	DRAWN
八木		渡辺	ISHIZUKA	TSURUTA 岡部(真)
'95.8.8		95.8.8	83.06.30	95.08.08

MATL. SPEC. NYLON 6

TREAT. & FIN.

NAME REAR HOLDER FOR S02 F,M (B)

PART NO. CH. CODE 7157-6024 ETC.

DWG NO. 7157-6024:R

YAZAKI CORPORATION