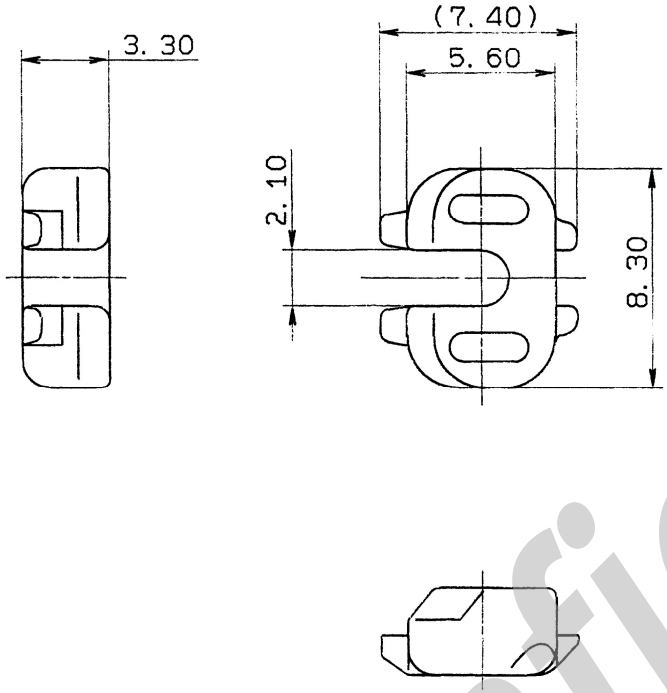

注　記

1. 適用ハウジング品番　：　7182-8710-30
　　：　7283-8710-30

NOTE

1. APPLICABLE HOUSING NO.
　　：　7182-8710-30
　　：　7283-8710-30

Confidential

ISSUE MARK

LET	DATE	REVISION RECORD	NO.	CHKD
	91. 01. 10	N E W	C91-L005	S. I

GENERAL TOLERANCE	10MAX	50MAX	100MAX	250MAX	2500VR	ANGLE	ECCENT
A	±0. 15	±0. 2	±0. 3	±0. 5	±0. 75	±30°	0. 1
B	±0. 2	±0. 3	±0. 55	±0. 95	±1. 4	±30°	0. 1
Ⓒ	±0. 3	±0. 5	±0. 8	±1. 4	±2	±30°	0. 15

SPECIFIED　　WEIGHT g

CUSTOMER
CUSTOMER PART NO.　　CUSTOMER DWG NO.
OFFICE　　STDLIB NO.
VENDOR
VENDOR NO.

DWG TYPE	DWG SOURCE	DWG DATE	UNIT	SCL	ANGLE
R	NEW	91. 01. 10	mm	5/1	3

APPROVED	CHECKED	CHECKED	DESIGN	DRAWN
	91. 01. 24	91. 01. 23	K. OHTAKA 90. 10. 02	T. MAKITA 91. 01. 10

MATL. SPEC.　PBT (BROWN)　　TREAT. & FIN.

NAME　SSD TYPE CONNECTOR
1P REAR HOLDER

PART NO.　7157-4600-80

DWG NO.　7157-4600-80:R　　TRIAL PART NO.

YAZAKI CORPORATION