PART NO. AND CH. CODE	COLOR	MATING PART NO.
7123-6367,A	NATURAL	7122-6367
7123-6367-40,A	GRAY	7122-6367-40

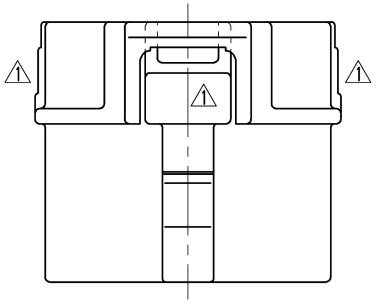

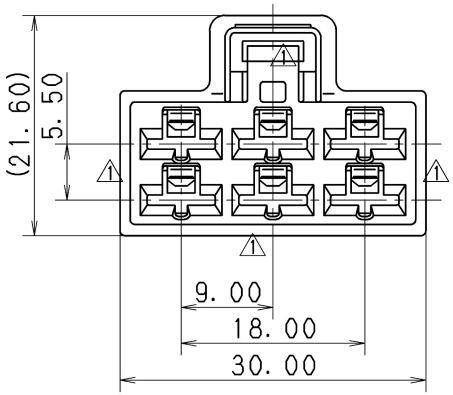

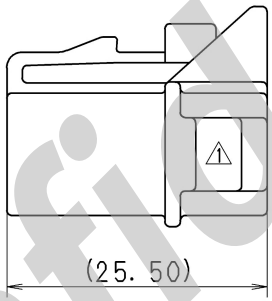

注 記

1. かん合相手品番：7122-6367, -6367-40
2. 適用端子品番：7116-2990-02, 7116-2991-02, 7116-2992-02.
   7116-2927-02, 7116-2928-02, 7116-2929-02.

NOTES

1. MATING PART NO. :7122-6367, -6367-40
2. APPLICABLE TERMINAL NO. :7116-2990-02, -2991-02, -2992-02.
   :7116-2927-02, -2928-02, -2929-02.

Confidential

ISSUE MARK

LET	DATE	REVISION RECORD	NO.	CHKD
3	10.11.15	CHANGED PART NAME	C10-ZB06	G.M
2	01.01.15	CHANGED FORM,A	C00-M645	H.Y
1	99.11.16	CHANGED FORM ETC.	C99-M694	H.Y
	99.07.22	NEW	C99-M098	H.Y

GENERAL TOLERANCE

	10MAX	50MAX	100MAX	250MAX	2500VR	ANGLE	ECCENT
A	±0.15	±0.2	±0.3	±0.5	±0.75	±30′	0.1
B	±0.2	±0.3	±0.55	±0.95	±1.4	±30′	0.1
C	±0.3	±0.5	±0.8	±1.4	±2	±30′	0.15

SPECIFIED

MASS

CUSTOMER

CUSTOMER PART NO. | CUSTOMER DWG NO.

OFFICE | TRIAL PART NO.

VENDOR

VENDOR NO.

DWG TYPE	DWG SOURCE	DWG DATE	UNIT	SCL	ANGLE
R	NEW	99.07.22	mm	2/1	3

APPROVED	CHECKED	CHECKED	DESIGN	DRAWN
S. MIZUSE	———	R. CABANGAL	YOSHIDA	G. MAGNAYON
10.11.15	———	10.11.15	99.06.16	10.11.15

MATL. SPEC. PBT

TREAT. & FIN.

NAME 3 M-LC TYPE HOUSING

FEMALE 6P (W, GY)

PART NO. CH. CODE 7123-6367 ETC.

DWG NO. 7123-6367:R

SET DWG NO.

YAZAKI CORPORATION