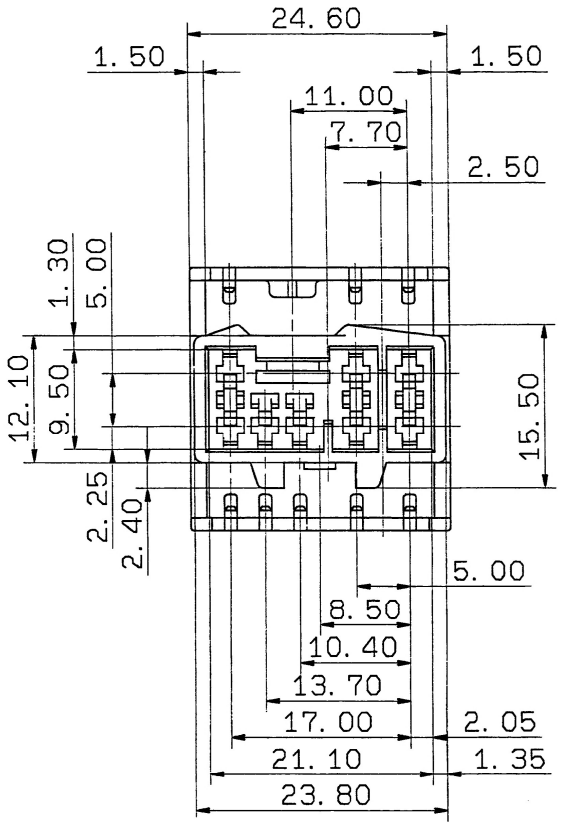

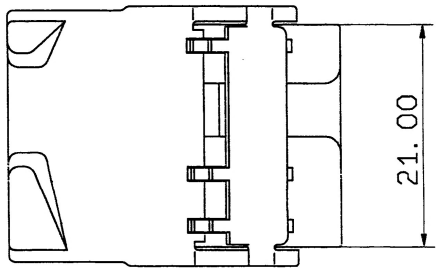

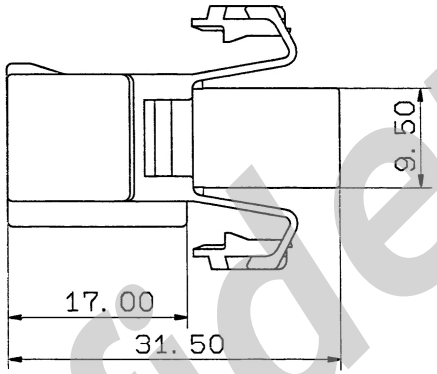

NOTES

1) MATING HOUSING NO. :7123-7880
2) MATING TERMINAL NO. :7114-1300 etc.

注 記

1) 嵌合相手品番:7123-7880
2) 使用端子品番:7114-1300 etc.

Confidential

ISSUE MARK

LET	DATE	REVISION RECORD	NO.	CHKD
—	88.09.23	新 設	8MC-1196	K.A

GENERAL TOLERANCE

	10MAX	50MAX	100MAX	250MAX	2500VR	ANGLE	ECCENT
A	±0.15	±0.2	±0.3	±0.5	±0.75	±30'	0.1
B	±0.2	±0.3	±0.55	±0.95	±1.4	±30'	0.1
©	±0.3	±0.5	±0.8	±1.4	±2	±30'	0.15

SPECIFIED

WEIGHT g

CUSTOMER					
CUSTOMER PART NO.		CUSTOMER DWG NO.			
C08MW					
OFFICE		STDLIB NO.			
VENDOR					
VENDOR NO.					
DWG TYPE	DWG SOURCE	DWG DATE	UNIT	SCL	ANGLE
R	NEW	88.09.23	mm	2/1	3
APPROVED	CHECKED	CHECKED	DESIGN	DRAWN	
	遠藤		阿部	阿部	
88.09.27	88.9.25		88.09.23	88.9.23	

MATL. SPEC. PBT(NATURAL)

TREAT. & FIN.

NAME C-TYPE CONNECTOR HOUSING 8PM(W)

PART NO. 7122-7880

DWG NO. 7122-7880:R

TRIAL PART NO.

YAZAKI CORPORATION