PART NO. AND CH. CODE	L	W_1	R_1	H_1	W_2	R_2	H_2	WIRE SIZE (mm²)
7116-4114-02	16.60	2.30	0.45	(2.45)	2.80	0.45	(3.55)	⚠0.3~0.6 OR EQUIVALENT
7116-4115-02	16.60	3.00	0.65	(3.25)	3.60	0.65	(4.45)	⚠0.75~1.25 OR EQUIVALENT
7116-4116-02	16.60	3.70	0.85	(4.00)	4.60	0.90	(5.50)	⚠1.5~3.0 OR EQUIVALENT

注記

⚠1. 嵌合相手品番：7114-4110-02 ETC.

NOTE

⚠1. MATING PART NO. :7114-4110-02 ETC.

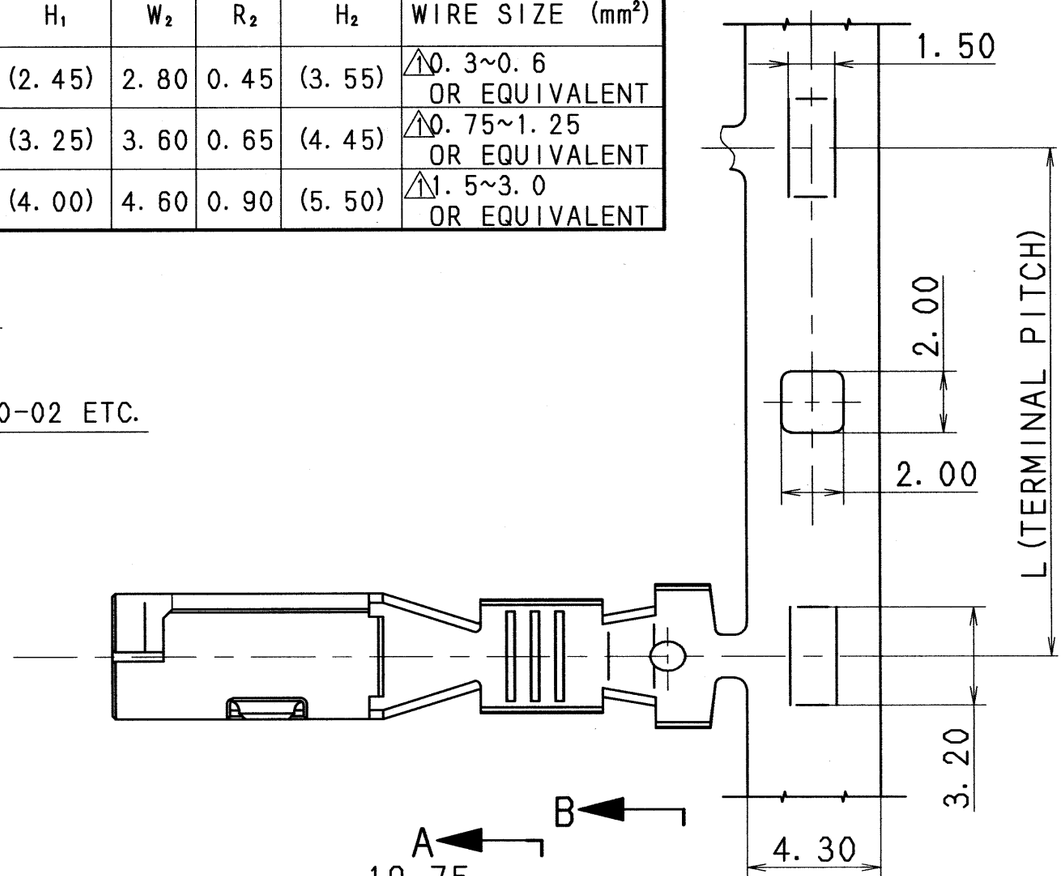

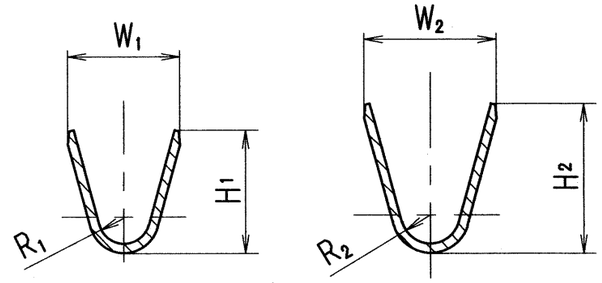

SEC. A-A　　SEC. B-B

APPLICABLE WIRE SIZE MARK

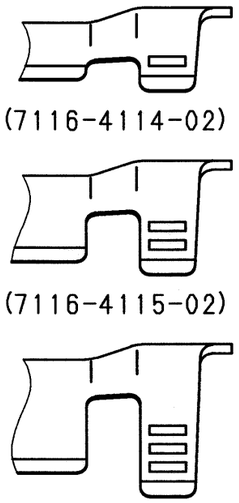

ISSUE MARK

LET	DATE	REVISION RECORD	NO.	CHKD
⚠	07.06.04	CHANGED WIRE SIZE, ETC.	C07-Z475	M.M
	00.07.06	NEW	C00-L532	I.I

GENERAL TOLERANCE

	10MAX	50MAX	100MAX	250MAX	250OVR	ANGLE	ECCENT
A	±0.15	±0.2	±0.3	±0.5	±0.75	±30′	0.1
B	±0.2	±0.3	±0.55	±0.95	±1.4	±30′	0.1
Ⓒ	±0.3	±0.5	±0.8	±1.4	±2	±30′	0.15

SPECIFIED　　MASS g

CUSTOMER		
CUSTOMER PART NO.	CUSTOMER DWG NO.	
OFFICE	TRIAL PART NO.	
VENDOR		
VENDOR NO.		

DWG TYPE	DWG SOURCE	DWG DATE	UNIT	SCL	ANGLE
R	NEW	00.07.06	mm	5/1	3

APPROVED	CHECKED	CHECKED	DESIGN	DRAWN
千沁(曳)	澤入	村松	S. KODAMA	M. ADRIANO
'07.06.05	'07.06.04	'07.06.04	00.03.24	07.06.04

MATL. COPPER ALLOY t=0.3　TREAT.
SPEC. (TIN PLATING)　& FIN.

NAME 110 FEMALE TERMINAL

PART NO. / CH. CODE 7116-4114-02 ETC.

DWG NO. 7116-4114-02:R　　SET DWG NO.

YAZAKI CORPORATION