PART NO. AND CH. CODE	W1	W2	WIRE SIZE (mm²)
7116-4110-08	2.30	2.80	0.3～0.6 OR EQUIVALENT
7116-4111-08	3.00	3.60	0.75～1.25 OR EQUIVALENT
7116-4112-08	3.70	4.60	1.5～3.0 OR EQUIVALENT

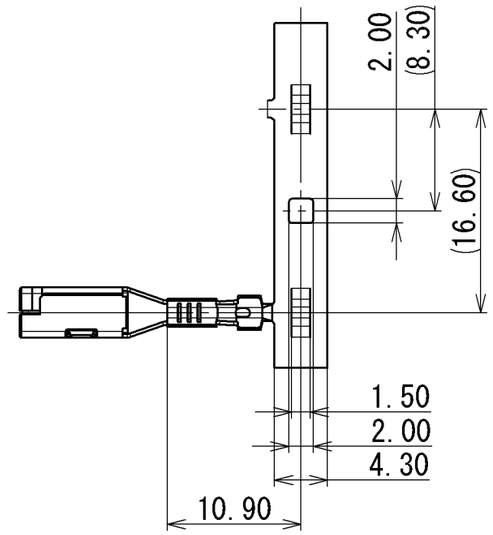

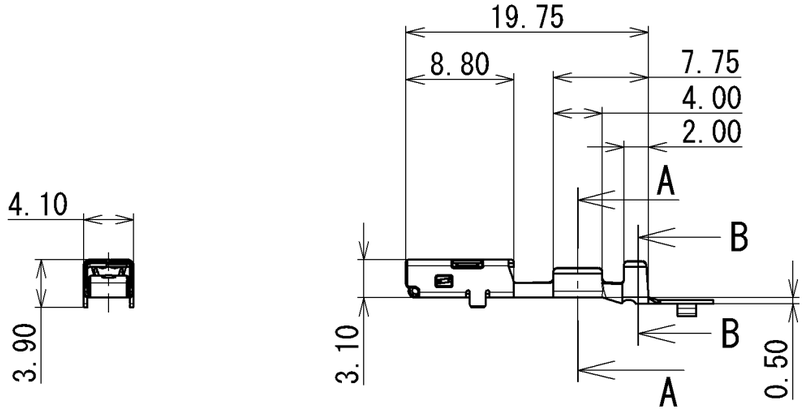

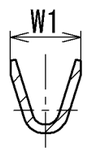

SEC. A-A (5:1)

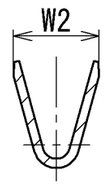

SEC. B-B (5:1)

注記

1. かん合相手品番:7114-4110-08,
7114-4111-08,
7114-4112-08.

NOTE

1. MATING PART NO.:7114-4110-08,
7114-4111-08,
7114-4112-08.

ISSUE MARK

LET	DATE	REVISION RECORD	NO.	CHKD
	2013/09/23	NEW	C13-Z416	S.S

GENERAL TOLERANCE

	10MAX	50MAX	100MAX	250MAX	2500VR	ANGLE	ECCENT
A	±0.15	±0.2	±0.3	±0.5	±0.75	±30'	0.1
B	±0.2	±0.3	±0.55	±0.95	±1.4	±30'	0.1
Ⓒ	±0.3	±0.5	±0.8	±1.4	±2	±30'	0.15

SPECIFIED

MASS

CUSTOMER

CUSTOMER PART NO. | CUSTOMER DWG NO.

OFFICE | TRIAL PART NO.

VENDOR

VENDOR NO.

DWG TYPE	DWG SOURCE	DWG DATE	UNIT	SCL	ANGLE
R	NEW	2013/09/23	mm	2:1	3

APPROVED	CHECKED	CHECKED	DESIGN	DRAWN
T. MAEJIMA	J. KAMIYA	———	J. KAMIYA	S. SANCEDA
2013/09/23	2013/09/23	———	2013/08/29	2013/09/23

MATL. SPEC. COPPER ALLOY (t=0.30)

TREAT. & FIN. GOLD PLATING

NAME YESC 2.8mm FEMALE TERMINAL (GOLD PLATED)

PART NO. CH. CODE 7116-4110-08 ETC.

DWG NO. 7116-4110-08:R

SET DWG NO.

YAZAKI CORPORATION