© COPYRIGHT. THIS DRAWING HAS COPYRIGHT AND MAY NOT BE COPIED IN WHOLE OR IN PART OR USED FOR ANY PURPOSE OTHER THAN FOR WHICH IT IS SUPPLIED WITHOUT EXPRESS WRITTEN CONSENT OF YAZAKI EUROPE LIMITED.

PART NO.	WIRE RANGE [mm²]	MATERIAL	PLATING	PLATING MARK	APPLICABLE SWS	W1	W2	MASS [g]
7114-4151-06	0.75~1.40	COPPER ALLOY	SILVER (SEE NOTE 2)	L	7158-3111-60	3.00	5.60	0.53
7114-4153-06	3.00~4.00	COPPER ALLOY	SILVER (SEE NOTE 2)	L	7172-5734-80	4.30	6.80	0.59

APPLICABLE WIRE GRIP SIZE IDENTIFICATION

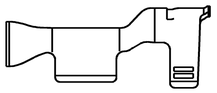

(SCALE 5:1)

7114-4151-06

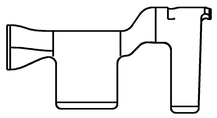

(SCALE 5:1)

7114-4153-06

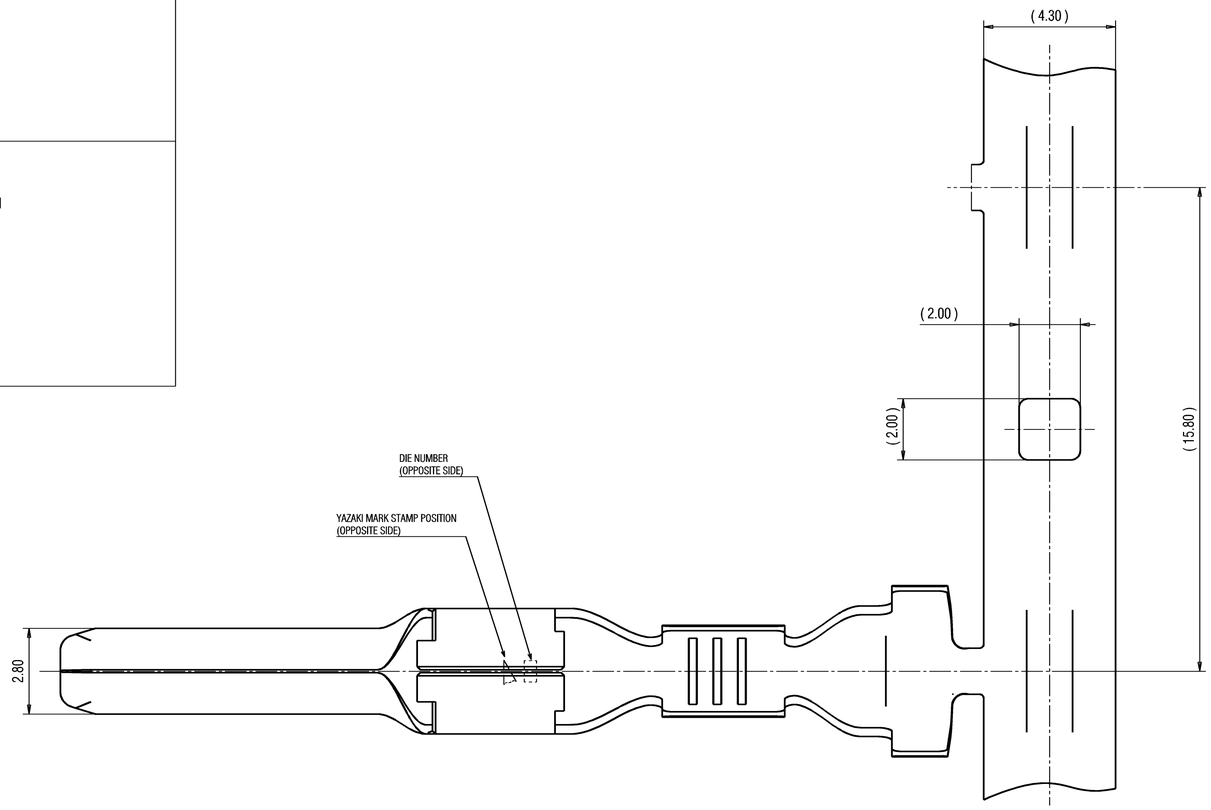

NOTES:

1. MATERIAL: SEE TABLE;
2. PLATING: SELECTIVE SILVER PLATING IN CONTACT AND CRIMP AREA;
3. MAING PRODUCT ACCORDING DRAWING: 7116-4153-06:R;
4. APPLICABLE SEALS: SEE TABLE;
5. FOR GENERAL DIMENSIONAL AND POSITIONAL TORELANCES SEE GENERAL TOLERANCE TABLE;
6. HANDLING MANUAL: YPES-15-299;
7. PRODUCT STANDARD: T.B.D.
8. THE MATERIALS USED IN THIS PRODUCT ARE IN CONFORMITY WITH REQUIREMENTS OF EU ELV 2000/53/EC DIRECTIVE AND ASSOCIATED DOCUMENTS.

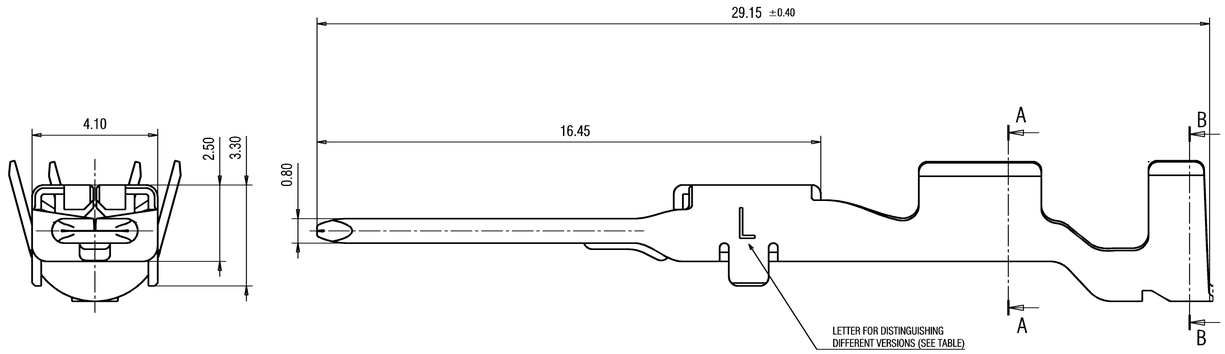

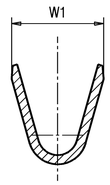

SECTION A-A

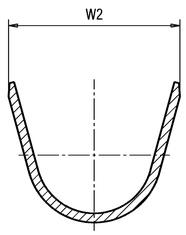

SECTION B-B

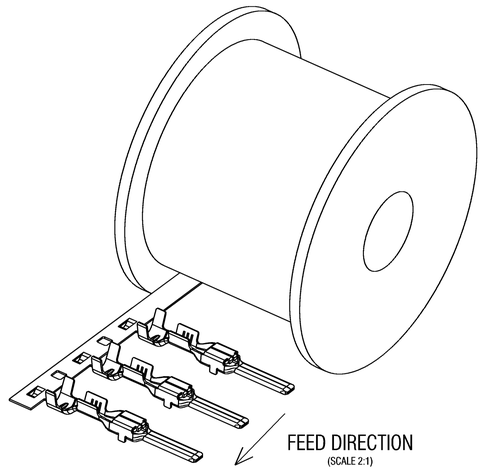

FEED DIRECTION
(SCALE 2:1)

ISO VIEW
(SCALE 1:1)

ISSUE MARK

LET	DATE	REVISION RECORD	NO.	CHKD
-	14.04.2022.	NEW	Y22-0270	F.S.

PRINTED COPIES ARE UNCONTROLLED. THEY ARE POTENTIALLY OUT-OF-DATE AND INVALID. DATABASE IS MASTER.

GENERAL TOLERANCE

	10MAX	50MAX	100MAX	250MAX	2500VR	ANGLE	ECCENT
A	±0.15	±0.2	±0.3	±0.5	±0.75	±30'	0.1
B	±0.2	±0.3	±0.55	±0.95	±1.4	±30'	0.1
C	±0.3	±0.5	±0.8	±1.4	±2	±30'	0.15

SPECIFIED

MASS SEE TABLE

CUSTOMER
CUSTOMER PART NO. | CUSTOMER DWG NO.
OFFICE YEL-P | TRIAL PART NO.
VENDOR | X32114-E034, X32114-E038
VENDOR NO.

DWG TYPE	DWG SOURCE	DWG DATE	UNIT	SCL	ANGLE
R	NEW	14.04.2022.	mm	10/1	3

APPROVED	CHECKED	CHECKED	DESIGN	DRAWN
G. GREGURIC	I. JAKOPLIC	G.TUMARA	M.COBANOV	F.SIMONEK
			14.04.2022.	14.04.2022.

MATL. SPEC. SEE NOTES | TREAT. & FIN. SEE NOTES

NAME 2.8 SYSTEM SEALED CONNECTOR MALE TERMINAL

PART NO. / CH. CODE 7114-4153-06 ETC.

DWG NO. 7114-4153-06 :R | SET DWG NO.

YAZAKI | A1