PART NO. AND CH. CODE	△2 L_4	H_1	H_2	W_1	R_1	W_2	R_2	WIRE SIZE (mm²)
7114-4110-02, A	13.00	△3 (2.45)	△3 (3.55)	2.30	0.45	2.80	0.45	△4 0.3~0.6 OR EQUIVALENT
7114-4111-02, A	13.00	△3 (3.25)	△3 (4.45)	3.00	0.65	3.60	0.65	△4 0.75~1.25 OR EQUIVALENT
7114-4112-02, A	13.00	△3 (4.00)	△3 (5.50)	3.70	0.85	4.60	0.90	1.5 ~2.5 OR EQUIVALENT
△2 7114-4113-02, A	18.50	(5.40)	(7.05)	4.90	1.50	6.50	1.50	3.0 ~5.0 OR EQUIVALENT

注 記

1. 嵌合相手品番：7116-4110-02 ETC.
△3 2. 7114-4113-02においての通電電流値は、2.5 mm²電線相当以下とする。
△3 3. 7114-4113-02に5 mm²電線を圧着して使用する場合には、専用ハウジングが必要となります。

NOTES

1. MATING PART NO. :7116-4110-02 ETC.
△3 2. CURRENT FOR 7114-4113-02 SHALL BE THE CURRENT FOR 2.5 mm² WIRE OR UNDER.
△3 3. IN CASE 5 mm² WIRE IS CRIMPED WITH THE TERMINAL 7114-4113-02, SPECIAL HOUSING IS REQUIRED.

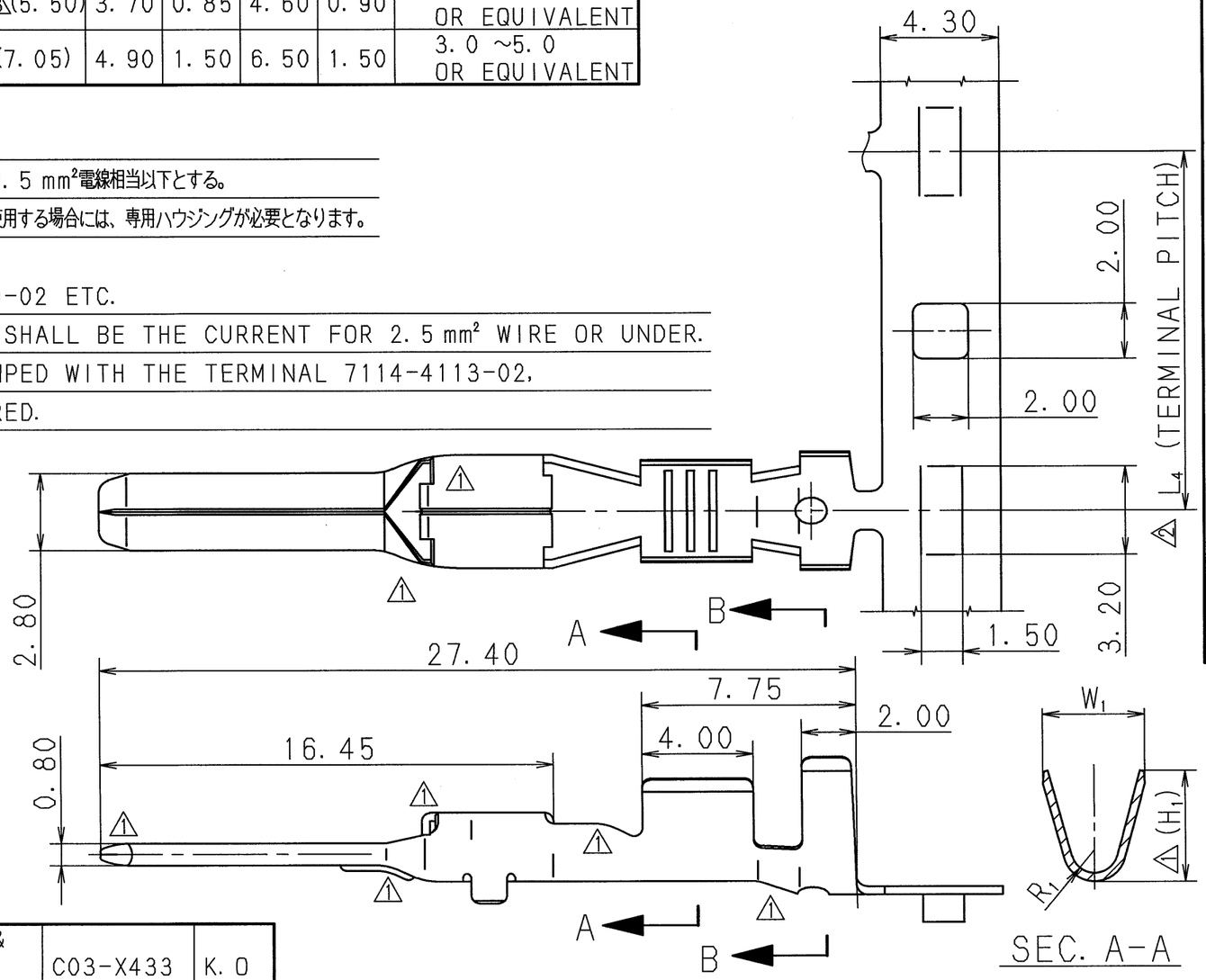

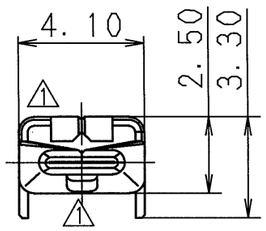

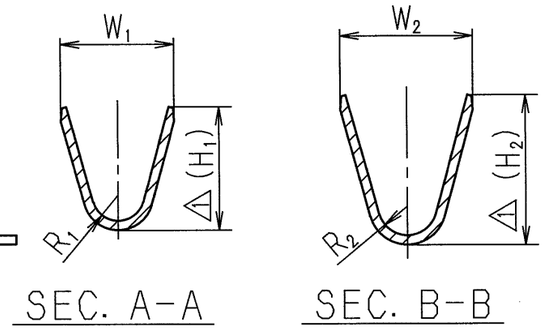

SEC. A-A

SEC. B-B

APPLICABLE WIRE SIZE MARK

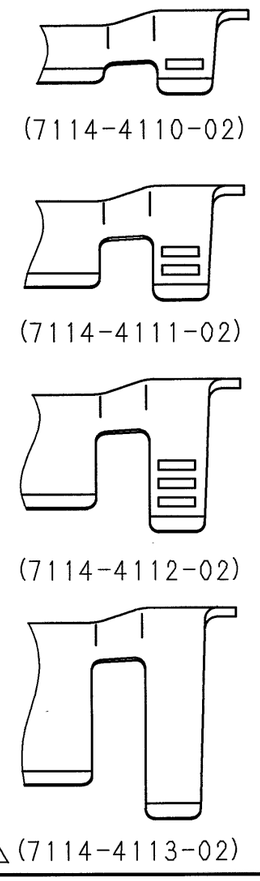

ISSUE MARK

LET	DATE	REVISION RECORD	NO.	CHKD
△4	03.07.07	CHANGED WIRE SIZE & CORRECTION OF A CLERICAL ERROR	C03-X433	K.O
△3	99.10.11	ADDED NOTE ETC.	C99-7133	T.S
△2	99.02.17	ADDED PART NO. ETC.	C99-L408	Y.U
△1	97.07.25	CHANGED FORM, A	C97-M151	H.K
—	95.07.25	NEW	C95-M193	Y.U

GENERAL TOLERANCE

	10MAX	50MAX	100MAX	250MAX	2500VR	ANGLE	ECCENT
A	±0.15	±0.2	±0.3	±0.5	±0.75	±30′	0.1
B	±0.2	±0.3	±0.55	±0.95	±1.4	±30′	0.1
C	±0.3	±0.5	±0.8	±1.4	±2	±30′	0.15

SPECIFIED

MASS g

CUSTOMER

CUSTOMER PART NO.

CUSTOMER DWG NO.

OFFICE

TRIAL PART NO.

VENDOR

VENDOR NO.

DWG TYPE	DWG SOURCE	DWG DATE	UNIT	SCL	ANGLE
R	NEW	95.07.25	mm	△4 5/1	3

APPROVED	CHECKED	CHECKED	DESIGN	DRAWN
竹之内	土山	藤本 喬	Y. UCHIDA	Y. OHKUBO 原
'03.8.20	'03.8.20	'03.8.19	95.05.31	03.07.07

MATL. SPEC. COPPER ALLOY t=0.3 (TIN PLITING)

TREAT. & FIN.

NAME △2 2.8 SYSTEM CONNECTOR MALE TERMINAL

PART NO. CH. CODE 7114-4110-02 ETC.

DWG NO. 7114-4110-02:R

SET DWG NO.

YAZAKI CORPORATION