PART NO.	A	B	C	D	E	F	G	H	I	J	K	L	M	N	O	APPLICABLE WIRE SIZE	TREAT. & FIN.
7010-3030	7	3.5	2.6	7	4.5	5.5	5	6	11	22	10.6	20	6.1	4	6.5	1.25+0.85~3+1.25	
-3031	8	4.6	3.6	8	4.5	5.5	5	6	11	22	10.6	21	6.1	4	6.5	1.25+0.85~3+1.25	
-3031-02	8	4.6	3.6	8	4.5	5.5	5	6	11	22	10.6	21	6.1	4	6.5	1.25+0.85~3+1.25	Snメッキ
-3032	10	5.6	4.6	9	4.5	5.5	5	6	11	22	10.6	22	6.1	4	6.5	1.25+0.85~3+1.25	
-3033	12	6.6	5.3	10	4.5	5.5	5	6	11	22	10.6	23	6.1	4	6.5	1.25+0.85~3+1.25	
-3033-02	12	6.6	5.3	10	4.5	5.5	5	6	11	22	10.6	23	6.1	4	6.5	1.25+0.85~3+1.25	Snメッキ
-3041	8	4.6	3.6	8	4.5	5.5	5	8	13	24	12.1	21	7.6	5	7.5	3+2~5+1.25	
-3042	10	5.6	4.6	9	4.5	5.5	5	8	13	24	12.1	22	7.6	5	7.5	3+2~5+1.25	
-3043	12	6.6	5.3	10	4.5	5.5	5	8	13	24	12.1	23	7.6	5	7.5	3+2~5+1.25	
-3051	8	4.6	3.6	8	4.5	5.5	6	11	14	28	13.1	21	7.6	5	8.5	5+2~8+2	
-3052	10	5.6	4.6	9	4.5	5.5	6	11	14	28	13.1	22	7.6	5	8.5	5+2~8+2	
-3053	12	6.6	5.3	10	4.5	5.5	6	11	14	28	13.1	23	7.6	5	8.5	5+2~8+2	

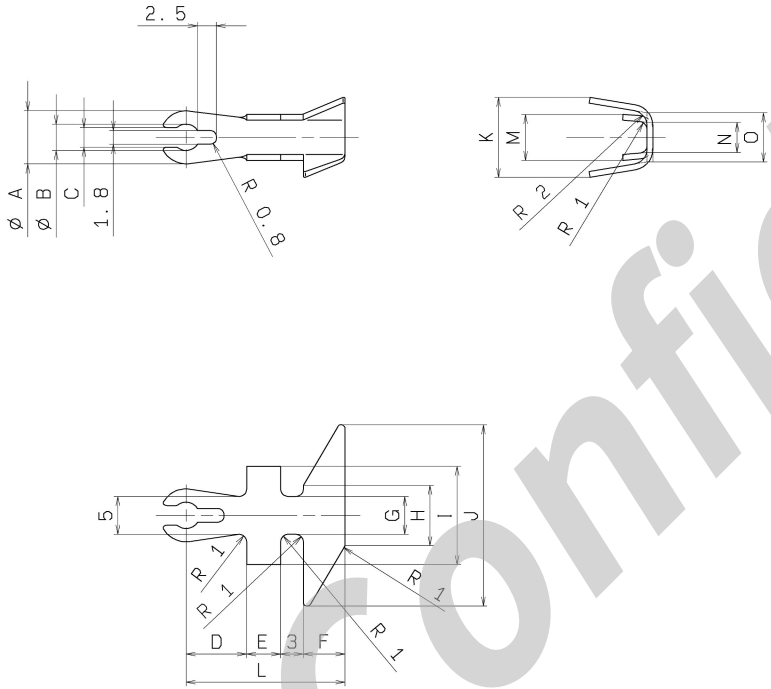

⚠10 注 記
1. 電線圧着後半田付けすること。

⚠10 NOTE
1. THIS PART SHOULD BE DIPPED IN SOLDER AFTER CRIMPING.

Confidential

LET	DATE	REVISION RECORD	NO.	CHKD
⚠10	03.01.28	ADD NOTE	C03-1020	Y.M
⚠9	99.08.18	RENEW AND CHANGED MATERIAL	C99-Y311	渡辺

GENERAL TOLERANCE						
	10MAX	50MAX	100MAX	250MAX	250OVR	ANGLE	ECCENT
A	±0.15	±0.2	±0.3	±0.5	±0.75	±30'	0.1
B	±0.2	±0.3	±0.55	±0.95	±1.4	±30'	0.1
C	±0.3	±0.5	±0.8	±1.4	±2	±30'	0.15
SPECIFIED						MASS	g

CUSTOMER								
CUSTOMER PART NO.		CUSTOMER DWG NO.						
OFFICE		TRIAL PART NO.						
VENDOR								
VENDOR NO.								
DWG TYPE	DWG SOURCE	DWG DATE	UNIT	SCL	ANGLE			
R	RENEW	99.08.18	mm	2:1	3			
APPROVED	CHECKED	CHECKED	DESIGN	DRAWN				
Y.YUKAWA	Y.SUZUKI	H.SATO		Y.MATSUI				
				03.01.28				

MATL. SPEC.	⚠3 黄銅 t=0.78
TREAT. & FIN.	SEE TABLE
NAME	LE TERMINAL
PART NO. / CH. CODE	7010-3030 ETC.
DWG NO.	7010-3030:R
SET DWG NO.	
	YAZAKI CORPORATION

ISSUE MARK

C-030128 151525